Environment

Clean Room Specification

● ISO Class 4*1 (ISO 14644-1)

- Built-in vacuum piping
- It is possible to mount the main body without removing the external cover, etc.
- Body-integrated linear guide specification

*1 Changes depending on the suction flow rate

Slider Type
Ball Screw Drive/11-LEFS Series

Step Motor (Servo/24 VDC) Servo Motor (24 VDC) **Type**
p. 179

AC Servo Motor **Type** p. 188

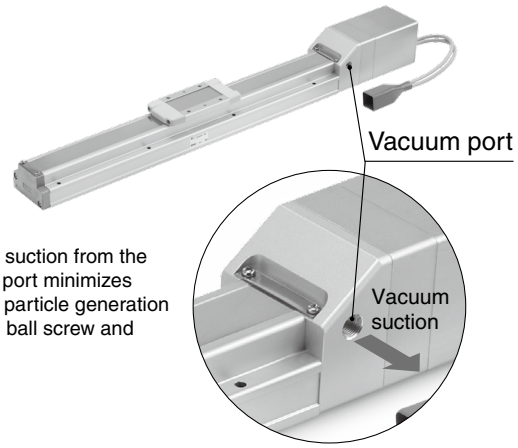

Vacuum suction from the vacuum port minimizes external particle generation from the ball screw and guide.

Support Guide/11-LEFG Series
p. 195

The support guide was designed to support workpieces with significant overhang.

- As the dimensions are the same as the LEF series body, installation is simple and contributes to a reduction in installation and assembly labor.
- The standard-equipped seal bands prevent grease from splashing and external foreign matter from entering.

Application example

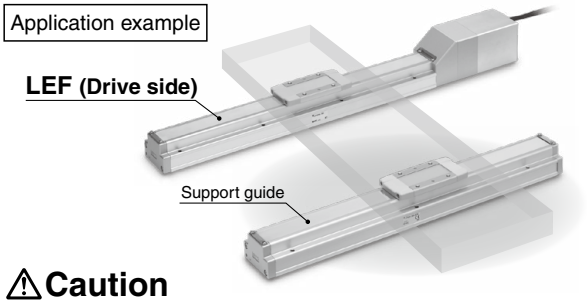

⚠Caution

After installing the actuator on the drive side, align it with the support guide. If the mounting flatness exceeds 0.1, install a floating mechanism separately on the workpiece installation surface (table).

Secondary Battery Compatible

● Copper (Cu) and zinc (Zn) free*1

*1 Excludes motors, cables, controllers/drivers

● Compatible with dew points as low as –70°C

Uses grease compatible with low dew points

Slider Type
Ball Screw Drive/25A-LEFS

Step Motor (Servo/24 VDC) Servo Motor (24 VDC) **Type**
p. 199

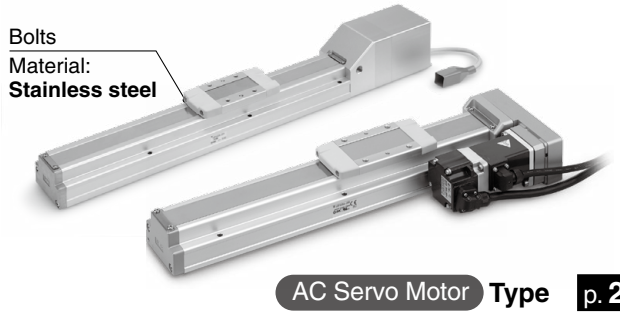

AC Servo Motor **Type** p. 202

Motor type \ Size	16	25	32	40
Step motor (Servo/24 VDC)	●	●	●	●
Servo motor (24 VDC)	●	●		
AC servo motor		●	●	●

* Copper and zinc materials are used for the motors, cables, controllers/drivers.

Particle Generation Characteristics

11-LEFS Series ▶ p. **179, 188**

Particle Generation Measuring Method

The particle generation data for SMC Clean Series are measured in the following test method.

■ Test Method (Example)

Operate the specimen that is placed in an ISO Class 5 equivalent clean bench, and measure the changes of the particle concentration over time until the number of cycles reaches the specified point.

■ Measuring Conditions

Measuring instrument	Description	Laser dust monitor (Automatic particle counter using the light scattering method)
	Minimum measurable particle diameter	0.1 μm
	Suction flow rate	28.3 L/min (ANR)
Setting conditions	Sampling time	5 min
	Interval time	55 min
	Sampling air flow	141.5 L (ANR)

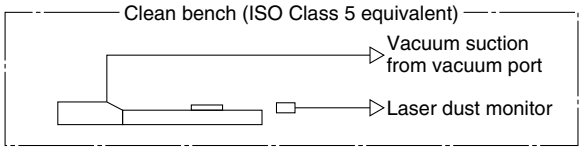

Particle generation measuring circuit

■ Evaluation Method

To obtain the measured values of particle concentration, the accumulated value*1 of particles captured every 5 minutes, by the laser dust monitor, is converted into the particle concentration in every 1 m^3.
When determining particle generation grades, the 95% upper confidence limit of the average particle concentration (average value), when each specimen is operated at a specified number of cycles*2 is considered.
The plots in the graphs indicate the 95% upper confidence limit of the average particle concentration of particles with a diameter within the horizontal axis range.

∗1 Sampling air flow rate: Number of particles contained in 141.5 L (ANR) of air
∗2 Actuator: 1 million cycles
∗ The particle generation characteristics (pages 176 and 177) provide a guide for selection but is not guaranteed.
∗ When the suction flow rate is 0 L/min, the particle concentration is measured during operation without suction.

Particle Generation Characteristics
Step Motor (Servo/24 VDC), Servo Motor (24 VDC)

11-LEFS16 Speed 500 mm/s

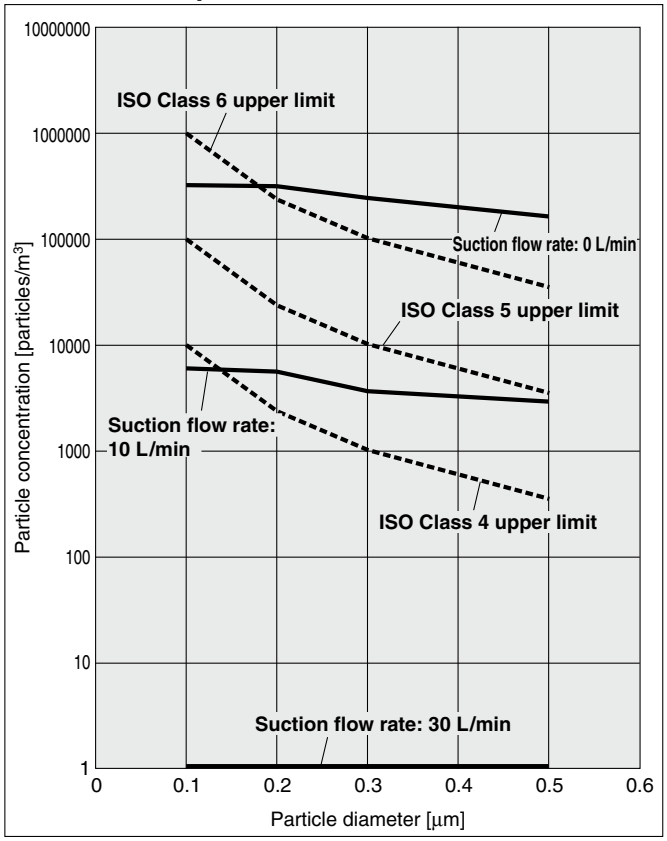

11-LEFS25 Speed 500 mm/s

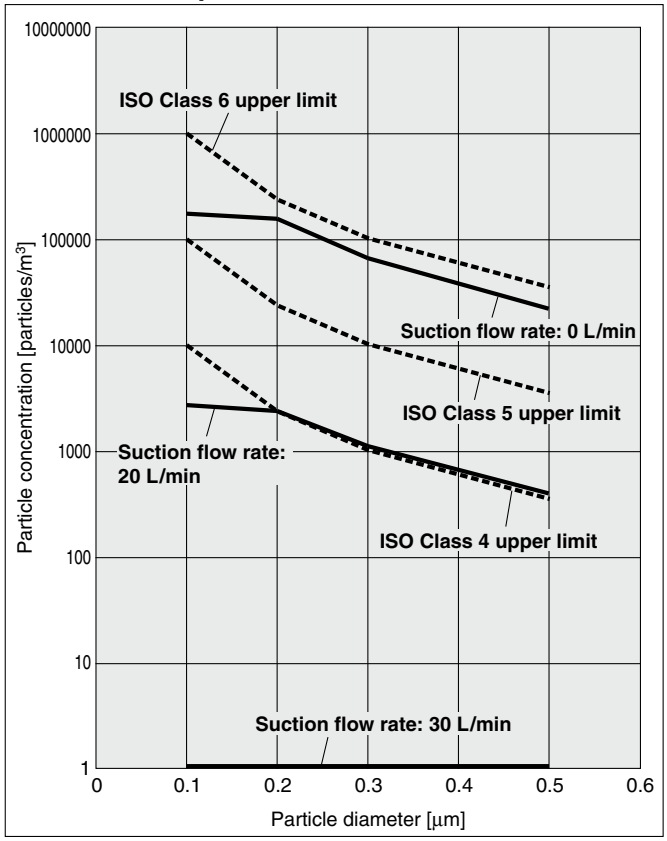

11-LEFS32 Speed 500 mm/s

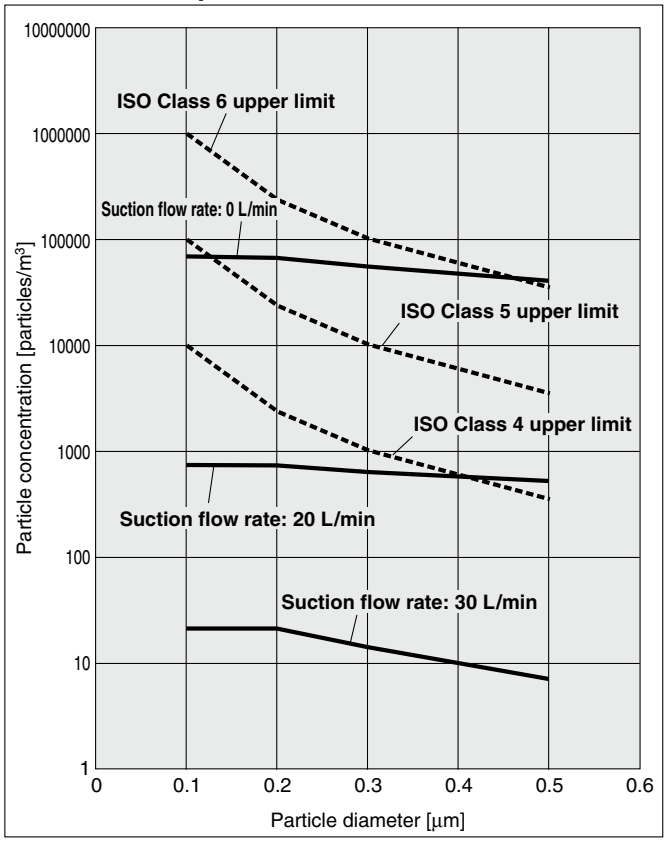

11-LEFS40 Speed 500 mm/s

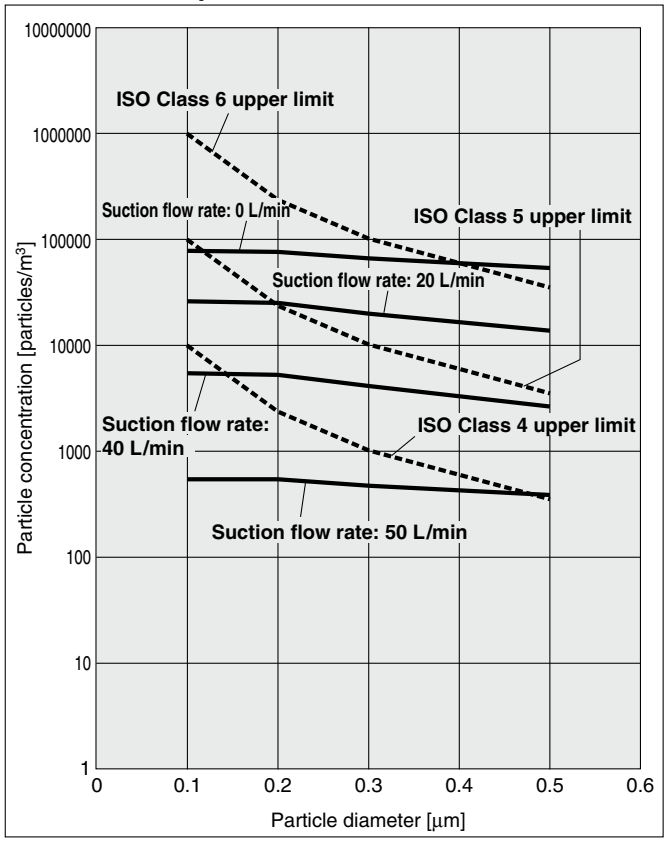

Particle Generation Characteristics
AC Servo Motor (100/200/400 W)

11-LEFS25 Speed 900 mm/s

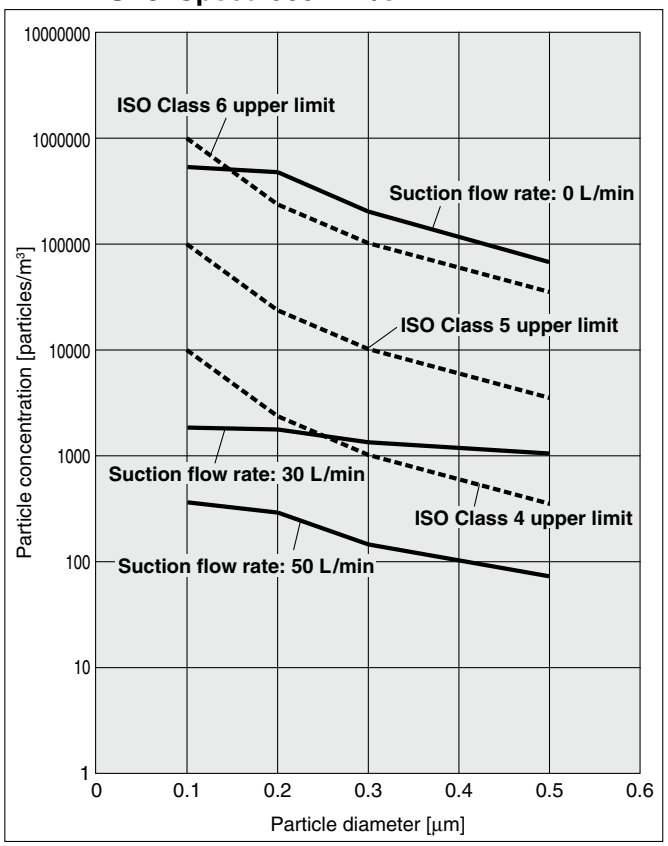

11-LEFS32 Speed 1000 mm/s

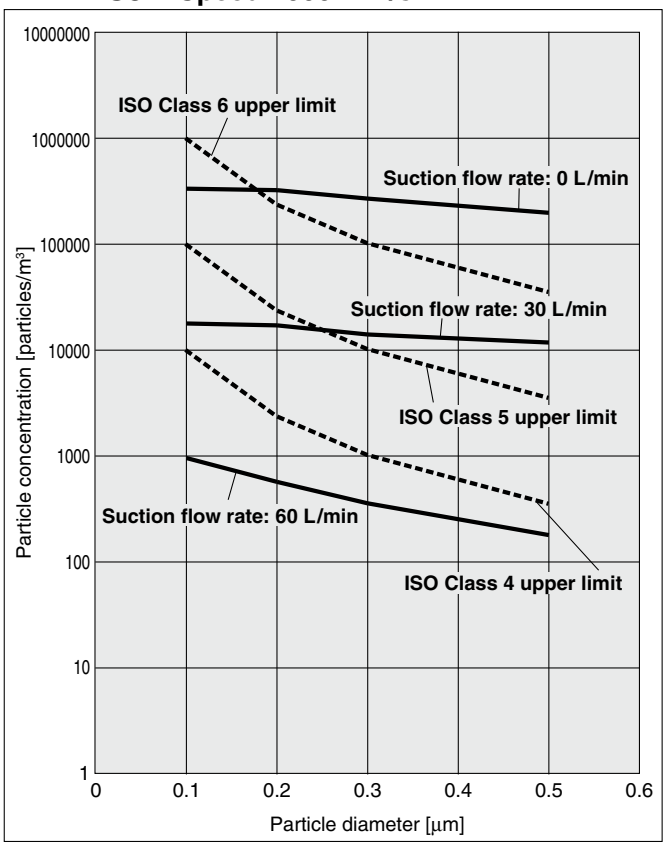

11-LEFS40 Speed 1000 mm/s

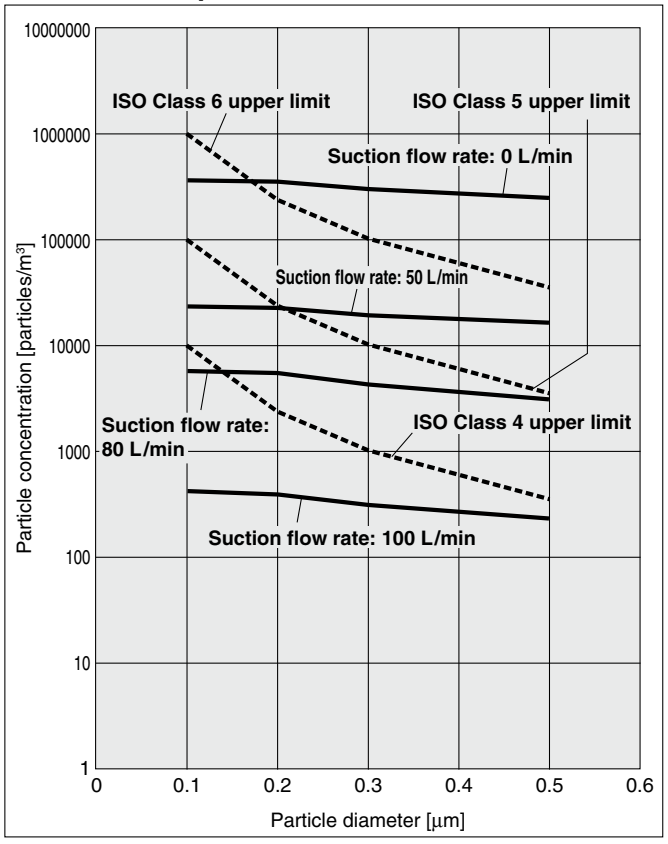

Electric Actuator/Slider Type
Ball Screw Drive Clean Room Specification

11-LEFS Series LEFS16, 25, 32, 40

Refer to page 37 for model selection and page 175 for particle generation characteristics.

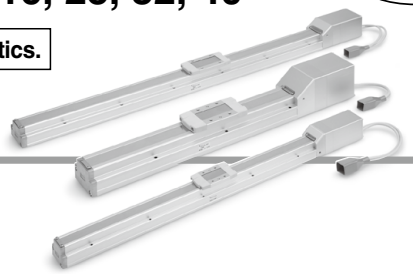

How to Order

11 – LEFS H 25 ☐ B – 200 ☐ ☐ K – S1

Clean Series

11	Vacuum type

LEC☐ Series **6N** **1** ☐

JXC☐ Series **CD17T**

❶ ❷ ❸ ❹ ❺ ❻ ❼ ❽ ❾ ❿ ⓫ ⓬

For details on controllers, refer to page 180.

❶ Accuracy

Nil	Basic type
H	High-precision type

❷ Size

16
25
32
40

❸ Motor type

Symbol	Type	Applicable size				Compatible controller/driver
		LEFS16	LEFS25	LEFS32	LEFS40	
Nil	Step motor (Servo/24 VDC)	●	●	●	●	LECP6 JXCE1 LECP1 JXC91 LECPA JXCP1 LECPMJ JXCD1 JXCL1
A	Servo motor (24 VDC)	●	●	—	—	LECA6

❹ Lead [mm]

Symbol	11-LEFS16	11-LEFS25	11-LEFS32	11-LEFS40
A	10	12	16	20
B	5	6	8	10

❺ Stroke*1 [mm]

Stroke	Note	
	Size	Applicable stroke
50 to 500	**16**	50, 100, 150, 200, 250, 300, 350, 400, 450, 500
50 to 600	**25**	50, 100, 150, 200, 250, 300, 350, 400, 450, 500, 550, 600
50 to 800	**32**	50, 100, 150, 200, 250, 300, 350, 400, 450, 500, 550, 600, 650, 700, 750, 800
150 to 1000	**40**	150, 200, 250, 300, 350, 400, 450, 500, 550, 600, 650, 700, 750, 800, 850, 900, 950, 1000

❻ Motor option

Nil	Without option
B	With lock

❼ Vacuum port

Nil	Left
R	Right

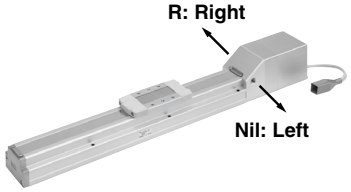

❽ Positioning pin hole

Nil	Housing B bottom*2	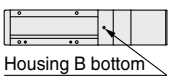 Housing B bottom
K	Body bottom 2 locations	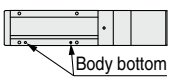 Body bottom

❾ Actuator cable type/length*4

Standard cable [m]	
Nil	None
S1	1.5*6
S3	3*6
S5	5*6

Robotic cable			[m]
R1	1.5	**RA**	10*3
R3	3	**RB**	15*3
R5	5	**RC**	20*3
R8	8*3		

Support Guide/*11-LEFG Series*

The support guide was designed to support workpieces with significant overhang.

p. 195

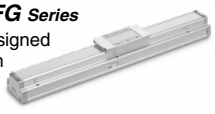

For auto switches, refer to pages 169 to 172.

LEC□ Series (For details, refer to page 181.)

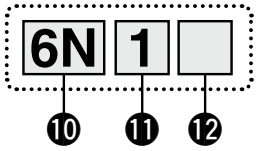

⑩ Controller/Driver type*5

Nil	Without controller/driver	
6N	**LECP6/LECA6** (Step data input type)	NPN
6P		PNP
1N	**LECP1***6 (Programless type)	NPN
1P		PNP
MJ	**LECPMJ***6 *7 (CC-Link direct input type)	—
AN	**LECPA***6 *8 (Pulse input type)	NPN
AP		PNP

⑪ I/O cable length*9, Communication plug

Nil	Without cable (Without communication plug connector)*11
1	1.5 m
3	3 m*10
5	5 m*10
S	Straight type communication plug connector*11
T	T-branch type communication plug connector*11

⑫ Controller/Driver mounting

Nil	Screw mounting
D	DIN rail*12

JXC□ Series (For details, refer to page 181.)

⑩ Controller

Nil	Without controller
C□1□□	With controller

Communication protocol

E	EtherCAT®
9	EtherNet/IP™
P	PROFINET
D	DeviceNet™
L	IO-Link

For single axis

Mounting

7	Screw mounting
8*12	DIN rail

Communication plug connector for DeviceNet™*13

Nil	Without plug connector
S	Straight type
T	T-branch type

*1 Please consult with SMC for non-standard strokes as they are produced as special orders.
*2 Refer to the body mounting example on page 205 for the mounting method.
*3 Produced upon receipt of order (Robotic cable only)
*4 The standard cable should only be used on fixed parts. For use on moving parts, select the robotic cable.
*5 For details on controllers/drivers and compatible motors, refer to the compatible controller/driver on the next page.
*6 Only available for the motor type "Step motor"
*7 Not compliant with CE
*8 When pulse signals are open collector, order the current limiting resistor (LEC-PA-R-□) on page 236 separately.
*9 When "Without controller/driver" is selected for controller/driver types, I/O cable cannot be selected. Refer to page 215 (For LECP6/LECA6), page 229 (For LECP1), or page 236 (For LECPA) if I/O cable is required.
*10 When "Pulse input type" is selected for controller/driver types, pulse input usable only with differential. Only 1.5 m cables usable with open collector
*11 For the LECPMJ, only "Nil," "S," and "T" are selectable since I/O cable is not included.
*12 The DIN rail is not included. Order it separately.
*13 Select "Nil" for anything other than DeviceNet™.

⚠Caution

[CE-compliant products]

① EMC compliance was tested by combining the electric actuator LEF series and the controller LEC/JXC series.
The EMC depends on the configuration of the customer's control panel and the relationship with other electrical equipment and wiring. Therefore, compliance with the EMC directive cannot be certified for SMC components incorporated into the customer's equipment under actual operating conditions. As a result, it is necessary for the customer to verify compliance with the EMC directive for the machinery and equipment as a whole.

② For the servo motor (24 VDC) specification, EMC compliance was tested by installing a noise filter set (LEC-NFA). Refer to page 215 for the noise filter set. Refer to the LECA series Operation Manual for installation.

③ CC-Link direct input type (LECPMJ) is not CE-compliant.

[UL-compliant products (For the LEC series)]

When compliance with UL is required, the electric actuator and controller/driver should be used with a UL1310 Class 2 power supply.

The actuator and controller/driver are sold as a package.

Confirm that the combination of the controller/driver and actuator is correct.

<Check the following before use.>

① Check the actuator label for the model number. This number should match that of the controller/driver.

② Check that the Parallel I/O configuration matches (NPN or PNP).

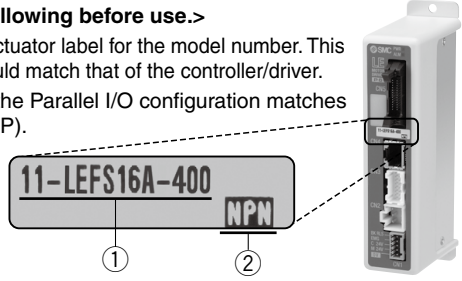

* Refer to the Operation Manual for using the products. Please download it via our website, https://www.smcworld.com

Compatible Controller/Driver

LEC□ Series

Type	Step data input type	Step data input type	CC-Link direct input type	Programless type	Pulse input type
Series	**LECP6**	**LECA6**	**LECPMJ**	**LECP1**	**LECPA**
Features	Value (Step data) input Standard controller		CC-Link direct input	Capable of setting up operation (step data) without using a PC or teaching box	Operation by pulse signals
Compatible motor	Step motor (Servo/24 VDC)	Servo motor (24 VDC)	Step motor (Servo/24 VDC)		
Max. number of step data	64 points			14 points	—
Power supply voltage	24 VDC				
Reference page	207	207	240	223	230

JXC□ Series

Type	EtherCAT® direct input type	EtherNet/IP™ direct input type	PROFINET direct input type	DeviceNet™ direct input type	IO-Link direct input type
Series	**JXCE1**	**JXC91**	**JXCP1**	**JXCD1**	**JXCL1**
Features	EtherCAT® direct input	EtherNet/IP™ direct input	PROFINET direct input	DeviceNet™ direct input	IO-Link direct input
Compatible motor	Step motor (Servo/24 VDC)				
Max. number of step data	64 points				
Power supply voltage	24 VDC				
Reference page	248				

Specifications

Step Motor (Servo/24 VDC)

Model				11-LEFS16		11-LEFS25		11-LEFS32		11-LEFS40	
Actuator specifications	Stroke [mm]*1			50 to 500		50 to 600		50 to 800		150 to 1000	
	Work load [kg] *2	Horizontal	LECP6/LECP1/LECPMJ JXCE1/91/P1/D1	14	15	25	30	45	50	55	65
			LECPA/JXC□$^{2}_{3}$	9	10	20	20	40	45	50	60
		Vertical		2	4	7.5	15	10	20	2	23
	Speed [mm/s]*2			10 to 500	5 to 250	12 to 500	6 to 250	16 to 500	8 to 250	20 to 500	10 to 250
	Max. acceleration/deceleration [mm/s²]			3000							
	Positioning repeatability [mm]		Basic type	±0.02							
			High-precision type	±0.015							
	Lost motion*3 [mm]		Basic type	0.1 or less							
			High-precision type	0.05 or less							
	Lead [mm]			10	5	12	6	16	8	20	10
	Impact/Vibration resistance [m/s²]*4			50/20							
	Actuation type			Ball screw							
	Guide type			Linear guide							
	Operating temperature range [°C]			5 to 40							
	Operating humidity range [%RH]			90 or less (No condensation)							
	Cleanliness class*5			ISO Class 4 (ISO 14644-1)							
	Grease	Ball screw /Linear guide portion		Low particle generation grease							
Electric specifications	Motor size			□28		□42		□56.4			
	Motor type			Step motor (Servo/24 VDC)							
	Encoder			Incremental A/B phase (800 pulse/rotation)							
	Rated voltage [V]			24 VDC ±10%							
	Power consumption [W]*6			22		38		50		100	
	Standby power consumption when operating [W]*7			18		16		44		43	
	Max. instantaneous power consumption [W]*8			51		57		123		141	
Lock unit specifications	Type*9			Non-magnetizing lock							
	Holding force [N]			20	39	78	157	108	216	113	225
	Power consumption [W]*10			2.9		5		5		5	
	Rated voltage [V]			24 VDC ±10%							

*1 Please consult with SMC for non-standard strokes as they are produced as special orders.
*2 Speed changes according to the controller/driver type and work load. Check "Speed–Work Load Graph (Guide)" on pages 38 and 39.
Furthermore, if the cable length exceeds 5 m, then it will decrease by up to 10% for each 5 m.
*3 A reference value for correcting an error in reciprocal operation
*4 Impact resistance: No malfunction occurred when the actuator was tested with a drop tester in both an axial direction and a perpendicular direction to the lead screw. (The test was performed with the actuator in the initial state.)
Vibration resistance: No malfunction occurred in a test ranging between 45 to 2000 Hz. The test was performed in both an axial direction and a perpendicular direction to the lead screw. (The test was performed with the actuator in the initial state.)
*5 The amount of particle generation changes according to the operating conditions and suction flow rate. Refer to the particle generation characteristics for details.
*6 The power consumption (including the controller) is for when the actuator is operating.
*7 The standby power consumption when operating (including the controller) is for when the actuator is stopped in the set position during the operation.
*8 The maximum instantaneous power consumption (including the controller) is for when the actuator is operating. This value can be used for the selection of the power supply.
*9 With lock only
*10 For an actuator with lock, add the power consumption for the lock.

Specifications

Servo Motor (24 VDC)

Model			11-LEFS16A		11-LEFS25A	
Actuator specifications	Stroke [mm]*1		50 to 500		50 to 600	
	Work load*2 [kg]	Horizontal	7	10	11	18
		Vertical	2	4	2.5	5
	Speed [mm/s]*2		1 to 500	1 to 250	2 to 500	1 to 250
	Max. acceleration/deceleration [mm/s²]		3000			
	Positioning repeatability [mm]	Basic type	±0.02			
		High-precision type	±0.015			
	Lost motion*3 [mm]	Basic type	0.1 or less			
		High-precision type	0.05 or less			
	Lead [mm]		10	5	12	6
	Impact/Vibration resistance [m/s²]*4		50/20			
	Actuation type		Ball screw			
	Guide type		Linear guide			
	Operating temperature range [°C]		5 to 40			
	Operating humidity range [%RH]		90 or less (No condensation)			
	Cleanliness class*5		ISO Class 4 (ISO 14644-1)			
	Grease	Ball screw /Linear guide portion	Low particle generation grease			
Electric specifications	Motor size		□28		□42	
	Motor output [W]		30		36	
	Motor type		Servo motor (24 VDC)			
	Encoder		Incremental A/B (800 pulse/rotation)/Z phase			
	Rated voltage [V]		24 VDC ±10%			
	Power consumption [W]*6		63		102	
	Standby power consumption when operating [W]*7		Horizontal 4/Vertical 9		Horizontal 4/Vertical 9	
	Max. instantaneous power consumption [W]*8		70		113	
Lock unit specifications	Type*9		Non-magnetizing lock			
	Holding force [N]		20	39	78	157
	Power consumption [W]*10		2.9		5	
	Rated voltage [V]		24 VDC ±10%			

*1 Please consult with SMC for non-standard strokes as they are produced as special orders.
*2 Check "Speed–Work Load Graph (Guide)" on page 41 for details. Furthermore, if the cable length exceeds 5 m, then it will decrease by up to 10% for each 5 m.
*3 A reference value for correcting an error in reciprocal operation
*4 Impact resistance: No malfunction occurred when the actuator was tested with a drop tester in both an axial direction and a perpendicular direction to the lead screw. (The test was performed with the actuator in the initial state.)
Vibration resistance: No malfunction occurred in a test ranging between 45 to 2000 Hz. The test was performed in both an axial direction and a perpendicular direction to the lead screw. (The test was performed with the actuator in the initial state.)
*5 The amount of particle generation changes according to the operating conditions and suction flow rate. Refer to the particle generation characteristics for details.
*6 The power consumption (including the controller) is for when the actuator is operating.
*7 The standby power consumption when operating (including the controller) is for when the actuator is stopped in the set position during operation.
*8 The maximum instantaneous power consumption (including the controller) is for when the actuator is operating. This value can be used for the selection of the power supply.
*9 With lock only
*10 For an actuator with lock, add the power consumption for the lock.

Weight

Series	11-LEFS16									
Stroke [mm]	50	100	150	200	250	300	350	400	450	500
Product weight [kg]	0.83	0.90	0.98	1.05	1.13	1.20	1.28	1.35	1.43	1.50
Additional weight with lock [kg]	0.12									

Series	11-LEFS25											
Stroke [mm]	50	100	150	200	250	300	350	400	450	500	550	600
Product weight [kg]	1.70	1.84	1.98	2.12	2.26	2.40	2.54	2.68	2.82	2.96	3.10	3.24
Additional weight with lock [kg]	0.26											

Series	11-LEFS32															
Stroke [mm]	50	100	150	200	250	300	350	400	450	500	550	600	650	700	750	800
Product weight [kg]	3.15	3.35	3.55	3.75	3.95	4.15	4.35	4.55	4.75	4.95	5.15	5.35	5.55	5.75	5.95	6.15
Additional weight with lock [kg]	0.53															

Series	11-LEFS40																	
Stroke [mm]	150	200	250	300	350	400	450	500	550	600	650	700	750	800	850	900	950	1000
Product weight [kg]	5.37	5.65	5.93	6.21	6.49	6.77	7.15	7.33	7.61	7.89	8.17	8.45	8.75	9.01	9.29	9.57	9.85	10.13
Additional weight with lock [kg]	0.53																	

Dimensions: Ball Screw Drive

11-LEFS16

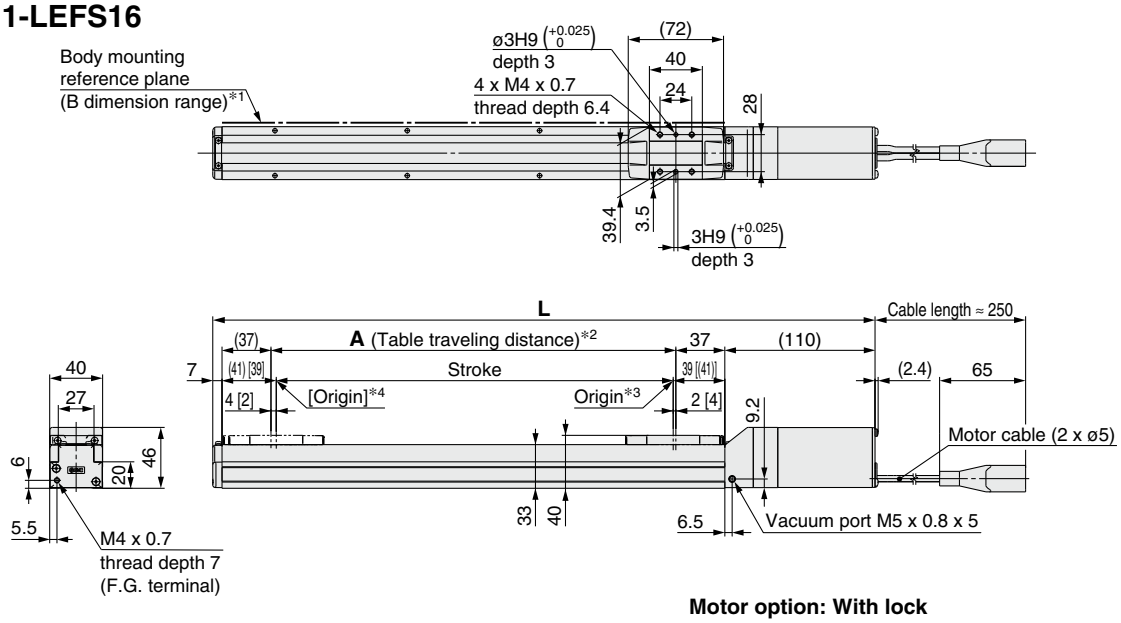

Motor option: With lock

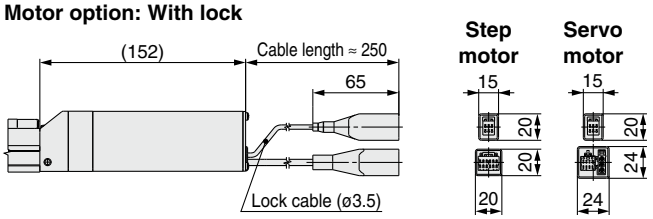

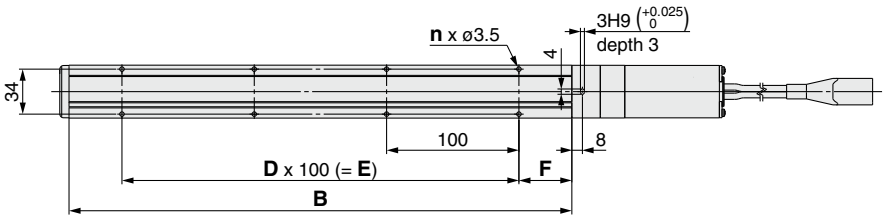

Positioning pin hole*5 (Option): Body bottom

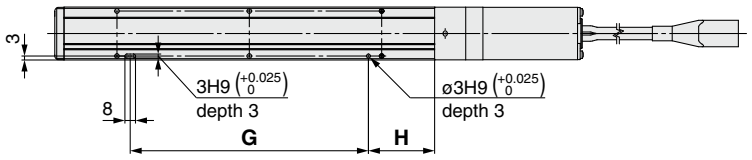

*1 When mounting the actuator using the body mounting reference plane, set the height of the opposite surface or pin to be 2 mm or more because of round chamfering. (Recommended height 5 mm)
In addition, be aware that surfaces other than the body mounting reference plane (B dimension range) may slightly protrude from the body mounting reference plane. Be sure to provide a clearance of 1 mm or more to avoid interference with workpieces, facilities, etc.
*2 This is the distance within which the table can move when it returns to origin.
Make sure workpieces mounted on the table do not interfere with the workpieces and facilities around the table.
*3 Position after return to origin
*4 [ ] for when the direction of return to origin has changed
*5 When using the body bottom positioning pin holes, do not simultaneously use the housing B bottom pin hole.

Dimensions [mm]

Model	L		A	B	n	D	E	F	G	H
	Without lock	With lock								
11-LEFS16□-50□	247	289	56	130	4	—	—	15	80	25
11-LEFS16□-100□	297	339	106	180	4	—	—	40	80	50
11-LEFS16□-150□	347	389	156	230	4	—	—		80	50
11-LEFS16□-200□	397	439	206	280	6	2	200		180	50
11-LEFS16□-250□	447	489	256	330	6	2	200		180	50
11-LEFS16□-300□	497	539	306	380	8	3	300		280	50
11-LEFS16□-350□	547	589	356	430	8	3	300		280	50
11-LEFS16□-400□	597	639	406	480	10	4	400		380	50
11-LEFS16□-450□	647	689	456	530	10	4	400		380	50
11-LEFS16□-500□	697	739	506	580	12	5	500		480	50

Dimensions: Ball Screw Drive

11-LEFS25

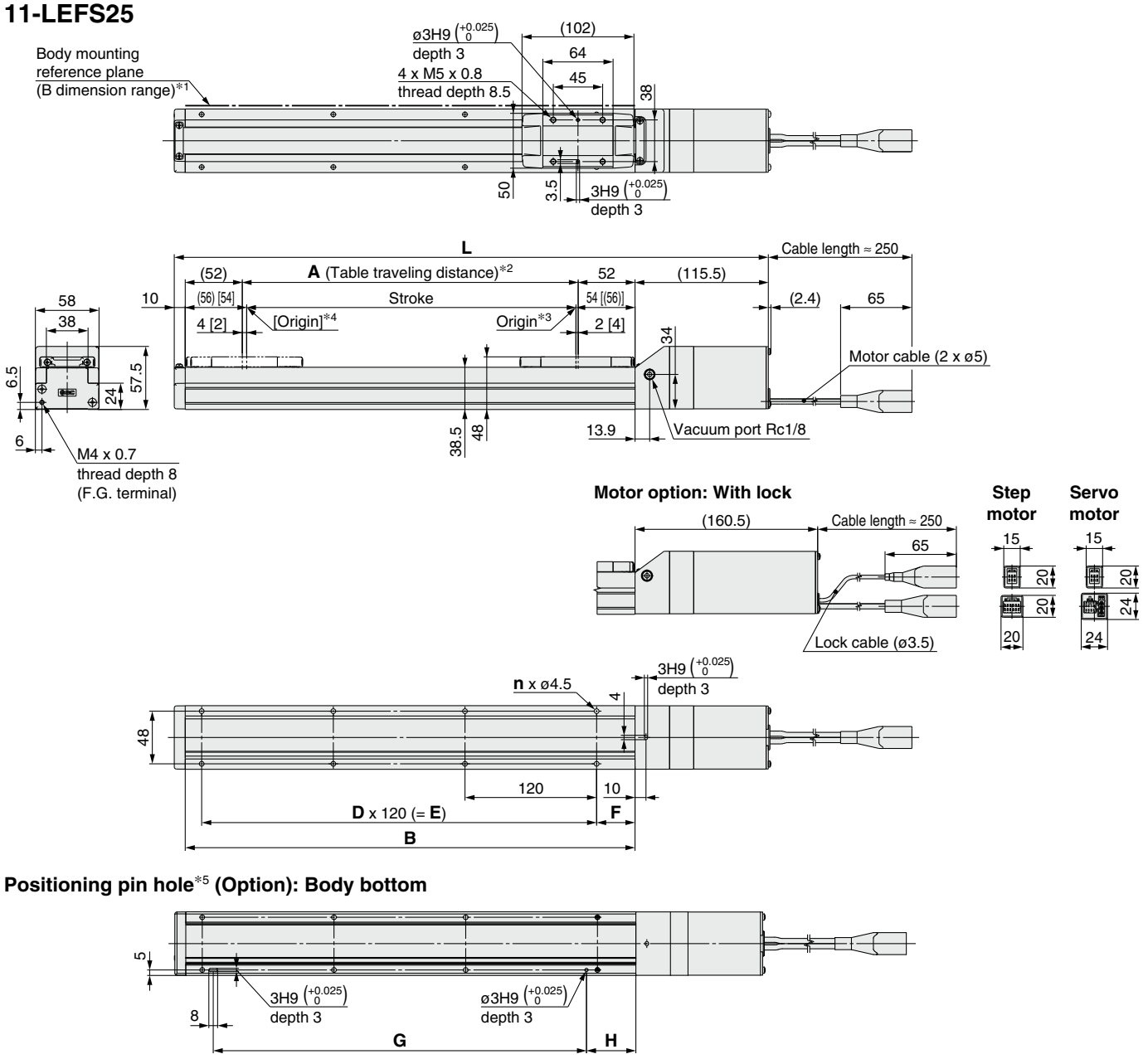

Positioning pin hole*5 (Option): Body bottom

*1 When mounting the actuator using the body mounting reference plane, set the height of the opposite surface or pin to be 3 mm or more because of round chamfering. (Recommended height 5 mm) In addition, be aware that surfaces other than the body mounting reference plane (B dimension range) may slightly protrude from the body mounting reference plane. Be sure to provide a clearance of 1 mm or more to avoid interference with workpieces, facilities, etc.

*2 This is the distance within which the table can move when it returns to origin. Make sure workpieces mounted on the table do not interfere with the workpieces and facilities around the table.

*3 Position after return to origin

*4 [ ] for when the direction of return to origin has changed

*5 When using the body bottom positioning pin holes, do not simultaneously use the housing B bottom pin hole.

Dimensions [mm]

Model	L		A	B	n	D	E	F	G	H
	Without lock	With lock								
11-LEFS25□-50□	285.5	330.5	56	160	4	—	—	20	100	30
11-LEFS25□-100□	335.5	380.5	106	210	4	—	—	35	100	45
11-LEFS25□-150□	385.5	430.5	156	260	4	—	—		100	45
11-LEFS25□-200□	435.5	480.5	206	310	6	2	240		220	45
11-LEFS25□-250□	485.5	530.5	256	360	6	2	240		220	45
11-LEFS25□-300□	535.5	580.5	306	410	8	3	360		340	45
11-LEFS25□-350□	585.5	630.5	356	460	8	3	360		340	45
11-LEFS25□-400□	635.5	680.5	406	510	8	3	360		340	45
11-LEFS25□-450□	685.5	730.5	456	560	10	4	480		460	45
11-LEFS25□-500□	735.5	780.5	506	610	10	4	480		460	45
11-LEFS25□-550□	785.5	830.5	556	660	12	5	600		580	45
11-LEFS25□-600□	835.5	880.5	606	710	12	5	600		580	45

Dimensions: Ball Screw Drive

11-LEFS32

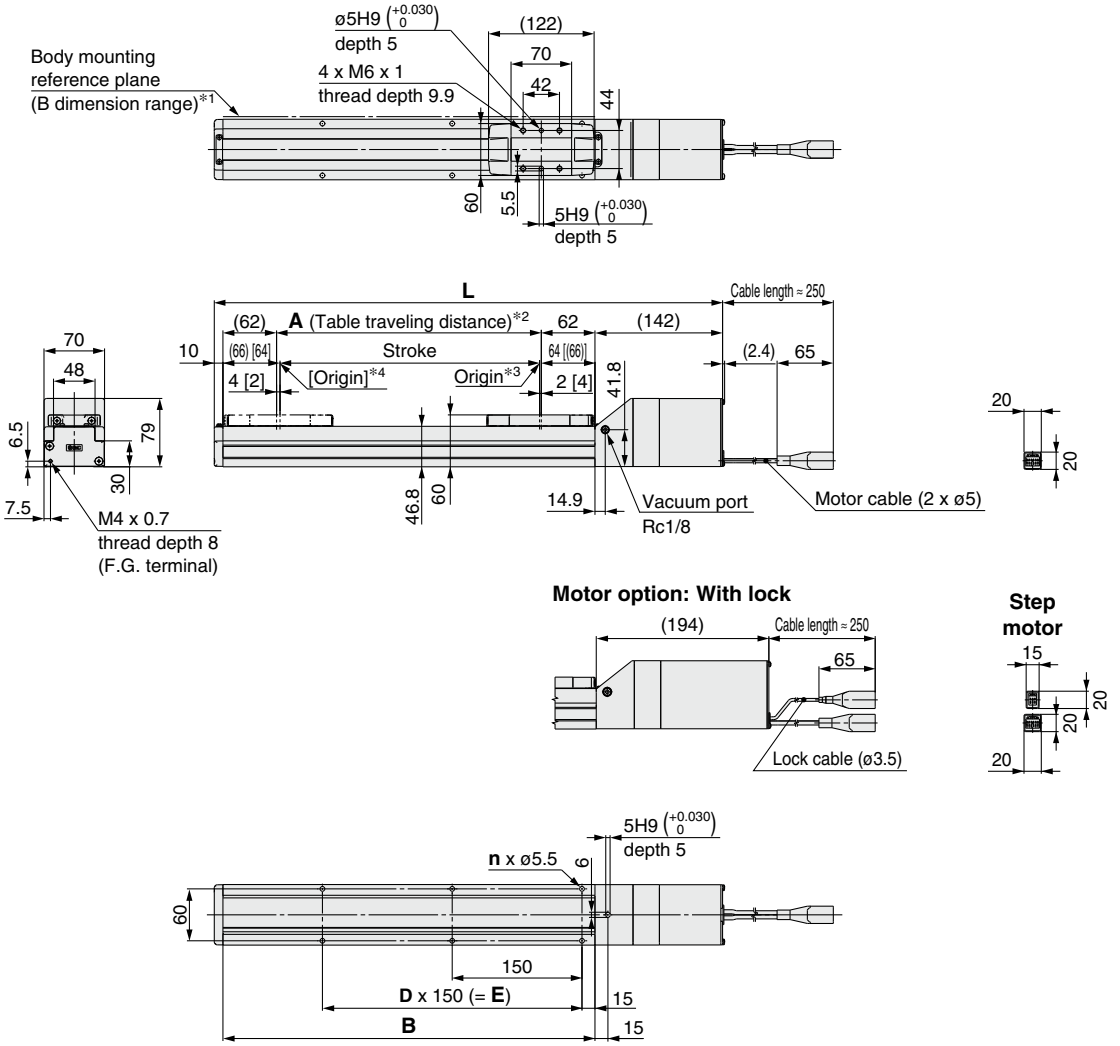

Positioning pin hole*5 (Option): Body bottom

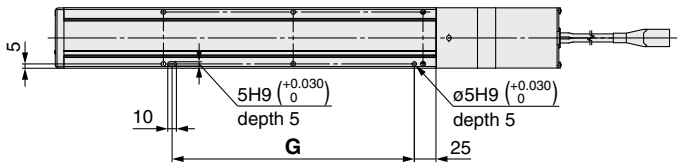

*1 When mounting the actuator using the body mounting reference plane, set the height of the opposite surface or pin to be 3 mm or more because of round chamfering. (Recommended height 5 mm)
In addition, be aware that surfaces other than the body mounting reference plane (B dimension range) may slightly protrude from the body mounting reference plane. Be sure to provide a clearance of 1 mm or more to avoid interference with workpieces, facilities, etc.
*2 This is the distance within which the table can move when it returns to origin.
Make sure workpieces mounted on the table do not interfere with the workpieces and facilities around the table.
*3 Position after return to origin
*4 [ ] for when the direction of return to origin has changed
*5 When using the body bottom positioning pin holes, do not simultaneously use the housing B bottom pin hole.

Dimensions [mm]

Model	L		A	B	n	D	E	G
	Without lock	With lock						
11-LEFS32□-50□	332	384	56	180	4	—	—	130
11-LEFS32□-100□	382	434	106	230	4	—	—	130
11-LEFS32□-150□	432	484	156	280	4	—	—	130
11-LEFS32□-200□	482	534	206	330	6	2	300	280
11-LEFS32□-250□	532	584	256	380	6	2	300	280
11-LEFS32□-300□	582	634	306	430	6	2	300	280
11-LEFS32□-350□	632	684	356	480	8	3	450	430
11-LEFS32□-400□	682	734	406	530	8	3	450	430
11-LEFS32□-450□	732	784	456	580	8	3	450	430
11-LEFS32□-500□	782	834	506	630	10	4	600	580
11-LEFS32□-550□	832	884	556	680	10	4	600	580
11-LEFS32□-600□	882	934	606	730	10	4	600	580
11-LEFS32□-650□	932	984	656	780	12	5	750	730
11-LEFS32□-700□	982	1034	706	830	12	5	750	730
11-LEFS32□-750□	1032	1084	756	880	12	5	750	730
11-LEFS32□-800□	1082	1134	806	930	14	6	900	880

Dimensions: Ball Screw Drive

11-LEFS40

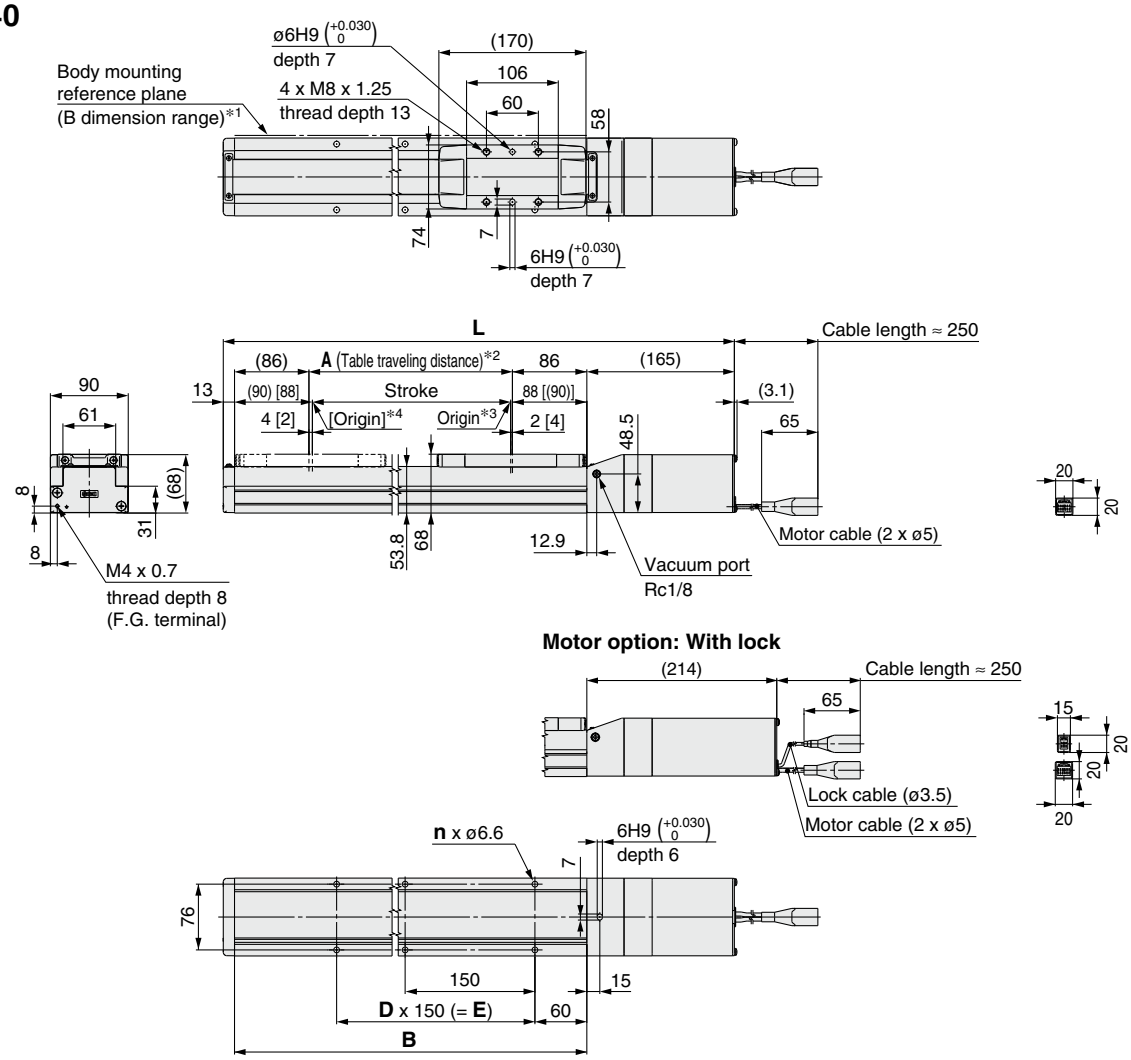

Positioning pin hole*5 (Option): Body bottom

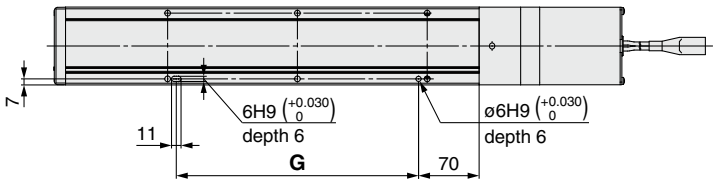

*1 When mounting the actuator using the body mounting reference plane, set the height of the opposite surface or pin to be 3 mm or more because of round chamfering. (Recommended height 5 mm) In addition, be aware that surfaces other than the body mounting reference plane (B dimension range) may slightly protrude from the body mounting reference plane. Be sure to provide a clearance of 1 mm or more to avoid interference with workpieces, facilities, etc.

*2 This is the distance within which the table can move when it returns to origin. Make sure workpieces mounted on the table do not interfere with the workpieces and facilities around the table.

*3 Position after return to origin

*4 [ ] for when the direction of return to origin has changed

*5 When using the body bottom positioning pin holes, do not simultaneously use the housing B bottom pin hole.

Dimensions [mm]

Model	L		A	B	n	D	E	G
	Without lock	With lock						
11-LEFS40□-150□	506	555	156	328	4	—	150	130
11-LEFS40□-200□	556	605	206	378	6	2	300	280
11-LEFS40□-250□	606	655	256	428	6	2	300	280
11-LEFS40□-300□	656	705	306	478	6	2	300	280
11-LEFS40□-350□	706	755	356	528	8	3	450	430
11-LEFS40□-400□	756	805	406	578	8	3	450	430
11-LEFS40□-450□	806	855	456	628	8	3	450	430
11-LEFS40□-500□	856	905	506	678	10	4	600	580
11-LEFS40□-550□	906	955	556	728	10	4	600	580
11-LEFS40□-600□	956	1005	606	778	10	4	600	580
11-LEFS40□-650□	1006	1055	656	828	12	5	750	730
11-LEFS40□-700□	1056	1105	706	878	12	5	750	730
11-LEFS40□-750□	1106	1155	756	928	12	5	750	730
11-LEFS40□-800□	1156	1205	806	978	14	6	900	880
11-LEFS40□-850□	1206	1255	856	1028	14	6	900	880
11-LEFS40□-900□	1256	1305	906	1078	14	6	900	880
11-LEFS40□-950□	1306	1355	956	1128	16	7	1050	1030
11-LEFS40□-1000□	1356	1405	1006	1178	16	7	1050	1030

Electric Actuator/Slider Type
Ball Screw Drive Clean Room Specification

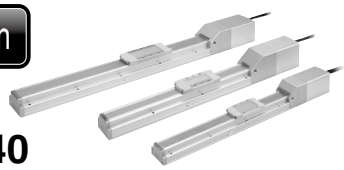

11-LEFS Series LEFS25, 32, 40

Refer to page 45 for model selection and page 175 for particle generation characteristics.

CE cULus * See the table below. RoHS

LECY□ Series ▶ p. 190

How to Order

11 – LEFS H 25 S2 B – 100 □ □ K – S 2 A2 □

❶ ❷ ❸ ❹ ❺ ❻ ❼ ❽ ❾ ❿ ⓫ ⓬

Clean Series

11	Vacuum type

❶ Accuracy

Nil	Basic type
H	High-precision type

❷ Size

25
32
40

❸ Motor type

Symbol	Type	Output [W]	Actuator size	Compatible driver	UL-compliant
S2*1	AC servo motor (Incremental encoder)	100	25	LECSA□-S1	—
S3		200	32	LECSA□-S3	—
S4		400	40	LECSA2-S4	—
S6*1	AC servo motor (Absolute encoder)	100	25	LECSB□-S5 LECSC□-S5 LECSS□-S5	—
S7		200	32	LECSB□-S7 LECSC□-S7 LECSS□-S7	—
S8		400	40	LECSB2-S8 LECSC2-S8 LECSS2-S8	—
T6*2, *3	AC servo motor (Absolute encoder)	100	25	LECSB2-T5 LECSC2-T5	—
				LECSS2-T5	●*3
T7*3		200	32	LECSB2-T7 LECSC2-T7	—
				LECSS2-T7	●*3
T8*3		400	40	LECSB2-T8 LECSC2-T8	—
				LECSS2-T8	●*3

*1 For motor type S2 and S6, the compatible driver part number suffixes are S1 and S5 respectively.
*2 For motor type T6, the compatible driver part number suffix is T5.
*3 The only compatible drivers complaint with UL standards are the LECSS2-T5, LECSS2-T7, and LECSS2-T8.

❹ Lead [mm]

Symbol	11-LEFS25	11-LEFS32	11-LEFS40
A	12	16	20
B	6	8	10

❺ Stroke [mm]

50	50
to	to
1000	1000

* For details, refer to the applicable stroke table below.

❻ Motor option

Nil	Without option
B	With lock

❼ Vacuum port*1

Nil	Left
R	Right
D	Both left and right

*1 Select "D" for the vacuum port for suction of 50 L/min (ANR) or more.

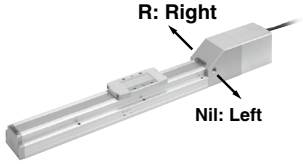

❽ Positioning pin hole

Nil	Housing B bottom*1	Housing B bottom
K	Body bottom 2 locations	Body bottom

*1 Refer to the body mounting example on page 205 for the mounting method.

❾ Cable type*1 *2

Nil	Without cable
S	Standard cable
R	Robotic cable (Flexible cable)

*1 The motor and encoder cables are included. (The lock cable is also included when the motor with lock option is selected.)
*2 Standard cable entry direction is "(B) Counter axis side." (Refer to page 288 for details.)

❿ Cable length*1

Nil	Without cable
2	2 m
5	5 m
A	10 m

*1 The length of the encoder, motor and lock cables are the same.

⓫ Driver type

	Compatible driver	Power supply voltage [V]	Size 25	Size 32	Size 40	UL-compliant
Nil	Without driver	—	●	●	●	—
A1	LECSA1-S□	100 to 120	●	●	—	—
A2	LECSA2-S□	200 to 230	●	●	●	—
B1	LECSB1-S□	100 to 120	●	●	—	—
B2	LECSB2-S□	200 to 230	●	●	●	—
	LECSB2-T□	200 to 240	●	●	●	—
C1	LECSC1-S□	100 to 120	●	●	—	—
C2	LECSC2-S□	200 to 230	●	●	●	—
	LECSC2-T□		●	●	●	—
S1	LECSS1-S□	100 to 120	●	●	—	—
S2	LECSS2-S□	200 to 230	●	●	●	—
	LECSS2-T□	200 to 240	●	●	●	●

* When the driver type is selected, the cable is included. Select cable type and cable length.
Example) S2S2: Standard cable (2 m) + Driver (LECSS2)
S2 : Standard cable (2 m)
Nil : Without cable and driver

⓬ I/O cable length [m]*1

Nil	Without cable
H	Without cable (Connector only)
1	1.5

*1 When "Without driver" is selected for driver type, only "Nil: Without cable" can be selected.
Refer to page 289 if I/O cable is required.
(Options are shown on page 289.)

Applicable Stroke Table

●: Standard

Model \ Stroke [mm]	50	100	150	200	250	300	350	400	450	500	550	600	650	700	750	800	850	900	950	1000
11-LEFS25	●	●	●	●	●	●	●	●	●	●	●	●	—	—	—	—	—	—	—	—
11-LEFS32	●	●	●	●	●	●	●	●	●	●	●	●	●	●	●	●	—	—	—	—
11-LEFS40	—	—	●	●	●	●	●	●	●	●	●	●	●	●	●	●	●	●	●	●

* Please consult with SMC for non-standard strokes as they are produced as special orders.

Support Guide/*LEFG Series*

The support guide was designed to support workpieces with significant overhang. p. 195

Compatible Driver

Driver type	Pulse input type/ Positioning type	Pulse input type	CC-Link direct input type	SSCNET Ⅲ type	Pulse input type	CC-Link direct input type	SSCNET Ⅲ/H type
Series	LECSA	LECSB	LECSC	LECSS	LECSB-T	LECSC-T	LECSS-T
Number of point tables	Up to 7	—	Up to 255 (2 stations occupied)	—	Up to 255	Up to 255 (2 stations occupied)	—
Pulse input	○	○	—	—	○	—	—
Applicable network	—	—	CC-Link	SSCNET Ⅲ	—	CC-Link	SSCNET Ⅲ/H
Control encoder	Incremental 17-bit encoder	Absolute 18-bit encoder	Absolute 18-bit encoder	Absolute 18-bit encoder	Absolute 22-bit encoder	Absolute 18-bit encoder	Absolute 22-bit encoder
Communication function	USB communication	USB communication, RS422 communication	USB communication, RS422 communication	USB communication	USB communication, RS422 communication		USB communication
Power supply voltage [V]	100 to 120 VAC (50/60 Hz), 200 to 230 VAC (50/60 Hz)				200 to 240 VAC (50/60 Hz)	200 to 230 VAC (50/60 Hz)	200 to 240 VAC (50/60 Hz)
Reference page	Click here						

Specifications

11-LEFS25, 32, 40 AC Servo Motor

Model				11-LEFS25S$^{2}_{6}$/T6		11-LEFS32S$^{3}_{7}$/T7		11-LEFS40S$^{4}_{8}$/T8	
Actuator specifications	Stroke [mm]*1			50 to 600		50 to 800		150 to 1000	
	Work load [kg]*2		Horizontal	20	20	40	45	50	60
			Vertical	8	15	10	20	15	30
	Max. speed [mm/s]*3	Stroke range	Up to 400	900	450	1000	500	1000	500
			401 to 500	720	360	1000	500	1000	500
			501 to 600	540	270	800	400	1000	500
			601 to 700	—	—	620	310	940	470
			701 to 800	—	—	500	250	760	380
			801 to 900	—	—	—	—	620	310
			901 to 1000	—	—	—	—	520	260
	Max. acceleration/deceleration [mm/s^2]			5000 (Refer to pages 47 to 49 for limit according to work load and duty ratio.)					
	Positioning repeatability [mm]		Basic type	±0.02					
			High-precision type	±0.01					
	Lost motion [mm]*4		Basic type	0.1 or less					
			High-precision type	0.05 or less					
	Lead [mm]			12	6	16	8	20	10
	Impact/Vibration resistance [m/s^2]*5			50/20					
	Actuation type			Ball screw					
	Guide type			Linear guide					
	Operating temperature range [°C]			5 to 40					
	Operating humidity range [%RH]			90 or less (No condensation)					
	Cleanliness class*6			ISO Class 4 (ISO 14644-1) Class 10 (Fed.Std.209E)					
	Grease	Ball screw /Linear guide portion		Low particle generation grease					
Electric specifications	Motor output/Size			100 W/□40		200 W/□60		400 W/□60	
	Motor type			AC servo motor (100/200 VAC)					
	Encoder*12			Motor type S2, S3, S4: Incremental 17-bit encoder (Resolution: 131072 p/rev) Motor type S6, S7, S8: Absolute 18-bit encoder (Resolution: 262144 p/rev) Motor type T6, T7, T8: Absolute 22-bit encoder (Resolution: 4194304 p/rev) (For LECSB2-T□, LECSS2-T□) Motor type T6, T7, T8: Absolute 18-bit encoder (Resolution: 262144 p/rev) (For LECSC2-T□)				
	Power consumption [W]*7		Horizontal	45		65		210	
			Vertical	145		175		230	
	Standby power consumption when operating [W]*8		Horizontal	2		2		2	
			Vertical	8		8		18	
	Max. instantaneous power consumption [W]*9			445		725		1275	
Lock unit specifications	Type*10			Non-magnetizing lock					
	Holding force [N]			131	255	197	385	330	660
	Power consumption at 20°C [W]*11			6.3		7.9		7.9	
	Rated voltage [V]			24 VDC $^{0}_{-10\%}$					

*1 Please consult with SMC for non-standard strokes as they are produced as special orders.
*2 For details, refer to "Speed–Work Load Graph (Guide)" on page 46.
*3 The allowable speed changes according to the stroke.
*4 A reference value for correcting an error in reciprocal operation
*5 Impact resistance: No malfunction occurred when the actuator was tested with a drop tester in both an axial direction and a perpendicular direction to the lead screw. (The test was performed with the actuator in the initial state.)
Vibration resistance: No malfunction occurred in a test ranging between 45 to 2000 Hz. The test was performed in both an axial direction and a perpendicular direction to the lead screw. (The test was performed with the actuator in the initial state.)
*6 The amount of particle generation changes according to the operating conditions and suction flow rate. Refer to the particle generation characteristics for details.
*7 The power consumption (including the driver) is for when the actuator is operating.
*8 The standby power consumption when operating (including the driver) is for when the actuator is stopped in the set position during the operation.
*9 The maximum instantaneous power consumption (including the driver) is for when the actuator is operating.
*10 Only when motor option "With lock" is selected
*11 For an actuator with lock, add the power consumption for the lock.
*12 For motor type T6, T7, and T8, the resolution will change depending on the driver type.

Weight

Series		11-LEFS25S□											
Stroke [mm]		50	100	150	200	250	300	350	400	450	500	550	600
Motor type	S2	2.00	2.14	2.28	2.44	2.56	2.69	2.84	2.99	3.12	3.24	3.40	3.54
	S6	2.06	2.20	2.34	2.50	2.62	2.75	2.90	3.05	3.18	3.30	3.46	3.60
	T6	2.04	2.18	2.32	2.48	2.60	2.73	2.88	3.03	3.16	3.28	3.44	3.58
Additional weight with lock [kg]		S2: 0.2/S6: 0.3/T6: 0.3											

Series		11-LEFS32S□															
Stroke [mm]		50	100	150	200	250	300	350	400	450	500	550	600	650	700	750	800
Motor type	S3	3.40	3.60	3.80	4.00	4.20	4.40	4.60	4.80	5.00	5.20	5.40	5.60	5.80	6.00	6.20	6.40
	S7	3.34	3.54	3.74	3.94	4.14	4.34	4.54	4.74	4.94	5.14	5.34	5.54	5.74	5.94	6.14	6.34
	T7	3.31	3.51	3.71	3.91	4.11	4.31	4.51	4.71	4.91	5.11	5.31	5.51	5.71	5.91	6.11	6.31
Additional weight with lock [kg]		S3: 0.4/S7: 0.7/T7: 0.5															

Series		11-LEFS40S□																	
Stroke [mm]		150	200	250	300	350	400	450	500	550	600	650	700	750	800	850	900	950	1000
Motor type	S4	5.82	6.10	6.38	6.65	6.95	7.25	7.51	7.80	8.07	8.25	8.63	8.90	9.20	9.45	9.76	10.05	10.32	10.60
	S8	5.92	6.20	6.48	6.75	7.05	7.35	7.61	7.90	8.17	8.35	8.73	9.00	9.30	9.55	9.86	10.15	10.42	10.70
	T8	5.91	6.19	6.47	6.74	7.04	7.34	7.60	7.89	8.16	8.34	8.72	8.99	9.29	9.54	9.85	10.14	10.41	10.69
Additional weight with lock [kg]		S4: 0.5/S8: 0.7/T8: 0.5																	

Electric Actuator/Slider Type
Ball Screw Drive Clean Room Specification
11-LEFS Series LEFS25, 32, 40

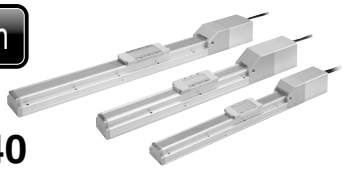

CE RoHS

Refer to page 53 for model selection and page 175 for particle generation characteristics.

LECS□ Series ▶ p. 188

How to Order

11 – LEFS H 25 V6 B – 100 □ □ K – S 3 M2 □

❶ ❷ ❸ ❹ ❺ ❻ ❼ ❽ ❾ ❿ ⓫ ⓬

Clean Series

11	Vacuum type

❶ Accuracy

Nil	Basic type
H	High-precision type

❷ Size

25
32
40

❹ Lead [mm]

Symbol	11-LEFS25	11-LEFS32	11-LEFS40
A	12	16	20
B	6	8	10

❺ Stroke [mm]

50	50
to	to
1000	1000

∗ For details, refer to the applicable stroke table below.

❻ Motor option

Nil	Without option
B	With lock

❸ Motor type

Symbol	Type	Output [W]	Size	Compatible driver
V6∗1	AC servo motor (Absolute encoder)	100	25	LECYM2-V5/LECYU2-V5
V7		200	32	LECYM2-V7/LECYU2-V7
V8		400	40	LECYM2-V8/LECYU2-V8

∗1 For motor type V6, the compatible driver part number suffix is V5.

❽ Positioning pin hole

Nil	Housing B bottom∗1	Housing B bottom
K	Body bottom 2 locations	Body bottom

∗1 Refer to the body mounting example on page 205 for the mounting method.

❼ Vacuum port∗1

Nil	Left
R	Right
D	Both left and right

∗1 Select "D" for the vacuum port for suction of 50 L/min (ANR) or more.

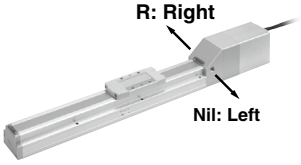

❾ Cable type∗1 ∗2

Nil	Without cable
S	Standard cable
R	Robotic cable (Flexible cable)

∗1 The motor and encoder cables are included. (The lock cable is also included when the motor with lock option is selected.)

∗2 Standard cable entry direction is "(B) Counter axis side." (Refer to page 288 for details.)

⓬ I/O cable length [m]∗1

Nil	Without cable
H	Without cable (Connector only)
1	1.5

∗1 When "Without driver" is selected for driver type, only "Nil: Without cable" can be selected.
Refer to page 289 if I/O cable is required.
(Options are shown on page 289.)

⓫ Driver type

	Compatible driver	Power supply voltage [V]
Nil	Without driver	—
M2	LECYM2-V□	200 to 230
U2	LECYU2-V□	200 to 230

⓾ Actuator cable length [m]

Nil	Without cable
3	3
5	5
A	10
C	20

Applicable Stroke Table ●: Standard

Model \ Stroke [mm]	50	100	150	200	250	300	350	400	450	500	550	600	650	700	750	800	850	900	950	1000
11-LEFS25	●	●	●	●	●	●	●	●	●	●	●	●	—	—	—	—	—	—	—	—
11-LEFS32	●	●	●	●	●	●	●	●	●	●	●	●	●	●	●	●	—	—	—	—
11-LEFS40	—	—	●	●	●	●	●	●	●	●	●	●	●	●	●	●	●	●	●	●

∗ Please consult with SMC for non-standard strokes as they are produced as special orders.

Support Guide/*LEFG Series*
The support guide was designed to support workpieces with significant overhang. p. 195

For auto switches, refer to pages 169 to 172.

Compatible Driver

Driver type	MECHATROLINK-Ⅱ type	MECHATROLINK-Ⅲ type
Series	**LECYM**	**LECYU**
Applicable network	MECHATROLINK-Ⅱ	MECHATROLINK-Ⅲ
Control encoder	Absolute 20-bit encoder	
Communication device	USB communication, RS-422 communication	
Power supply voltage [V]	200 to 230 VAC (50/60 Hz)	
Reference page	295	

Specifications

AC Servo Motor

Model			11-LEFS25□V6		11-LEFS32□V7		11-LEFS40□V8	
Actuator specifications	Stroke [mm]*1		50 to 800		50 to 1000		150 to 1200	
	Work load [kg]*2	Horizontal	20	20	40	45	50	60
		Vertical	8	15	10	20	15	30
	Max. speed*3 [mm/s] / Stroke range	Up to 400	900	450	1000	500	1000	500
		401 to 500	720	360	1000	500	1000	500
		501 to 600	540	270	800	400	1000	500
		601 to 700	420	210	620	310	940	470
		701 to 800	330	160	500	250	760	380
		801 to 900	—	—	410	200	620	310
		901 to 1000	—	—	340	170	520	260
		1001 to 1100	—	—	—	—	440	220
		1101 to 1200	—	—	—	—	380	190
	Max. acceleration/deceleration [mm/s²]		20000 (Refer to pages 47 to 49 for limit according to work load and duty ratio.)					
	Positioning repeatability [mm]	Basic type	±0.02					
		High-precision type	±0.01					
	Lost motion [mm]*4	Basic type	0.1 or less					
		High-precision type	0.05 or less					
	Lead [mm]		12	6	16	8	20	10
	Impact/Vibration resistance [m/s²]*5		50/20					
	Actuation type		Ball screw (LEFS□), Ball screw + Belt (LEFS□ R/L)					
	Guide type		Linear guide					
	Operating temperature range [°C]		5 to 40					
	Operating humidity range [%RH]		90 or less (No condensation)					
	Cleanliness class*6		ISO Class 4 (ISO 14644-1) Class 10 (Fed.Std.209E)					
	Grease	Ball screw /Linear guide portion	Low particle generation grease					
Electric specifications	Motor output/Size		100 W/□40		200 W/□60		400 W/□60	
	Motor type		AC servo motor (200 VAC)					
	Encoder		Absolute 20-bit encoder (Resolution: 1048576 p/rev)					
	Power consumption [W]*7	Horizontal	45		65		210	
		Vertical	145		175		230	
	Standby power consumption when operating [W]*8	Horizontal	2		2		2	
		Vertical	8		8		18	
	Max. instantaneous power consumption [W]*9		445		725		1275	
Lock unit specifications	Type*10		Non-magnetizing lock					
	Holding force [N]		131	255	197	385	330	660
	Power consumption at 20°C [W]*11		5.5		6		6	
	Rated voltage [V]		24 VDC +10% 0					

*1 Please consult with SMC for non-standard strokes as they are produced as special orders.
*2 For details, refer to "Speed–Work Load Graph (Guide)" on page 54.
*3 The allowable speed changes according to the stroke.
*4 A reference value for correcting an error in reciprocal operation
*5 Impact resistance: No malfunction occurred when the actuator was tested with a drop tester in both an axial direction and a perpendicular direction to the lead screw. (The test was performed with the actuator in the initial state.)
Vibration resistance: No malfunction occurred in a test ranging between 45 to 2000 Hz. The test was performed in both an axial direction and a perpendicular direction to the lead screw. (The test was performed with the actuator in the initial state.)
*6 The amount of particle generation changes according to the operating conditions and suction flow rate. Refer to the particle generation characteristics for details.
*7 The power consumption (including the driver) is for when the actuator is operating.
*8 The standby power consumption when operating (including the driver) is for when the actuator is stopped in the set position during the operation.
*9 The maximum instantaneous power consumption (including the driver) is for when the actuator is operating.
*10 Only when motor option "With lock" is selected
*11 For an actuator with lock, add the power consumption for the lock.

Weight

Series	11-LEFS25□V6															
Stroke [mm]	50	100	150	200	250	300	350	400	450	500	550	600	650	700	750	800
Product weight [kg]	2.06	2.20	2.34	2.50	2.62	2.75	2.90	3.05	3.18	3.30	3.46	3.60	3.74	3.88	4.02	4.20
Additional weight with lock [kg]	0.3															

Series	11-LEFS32□V7																				
Stroke [mm]	50	100	150	200	250	300	350	400	450	500	550	600	650	700	750	800	850	900	950	1000
Product weight [kg]	3.40	3.60	3.80	4.00	4.20	4.40	4.60	4.80	5.00	5.20	5.40	5.60	5.80	6.00	6.20	6.40	6.60	6.80	7.00	7.20
Additional weight with lock [kg]	0.7																			

Series	11-LEFS40□V8																				
Stroke [mm]	150	200	250	300	350	400	450	500	550	600	650	700	750	800	850	900	950	1000	1100	1200
Product weight [kg]	5.92	6.20	6.48	6.75	7.05	7.35	7.61	7.90	8.17	8.35	8.73	9.00	9.30	9.55	9.86	10.15	10.42	10.70	11.26	11.82
Additional weight with lock [kg]	0.7																			

Dimensions: Ball Screw Drive

11-LEFS25

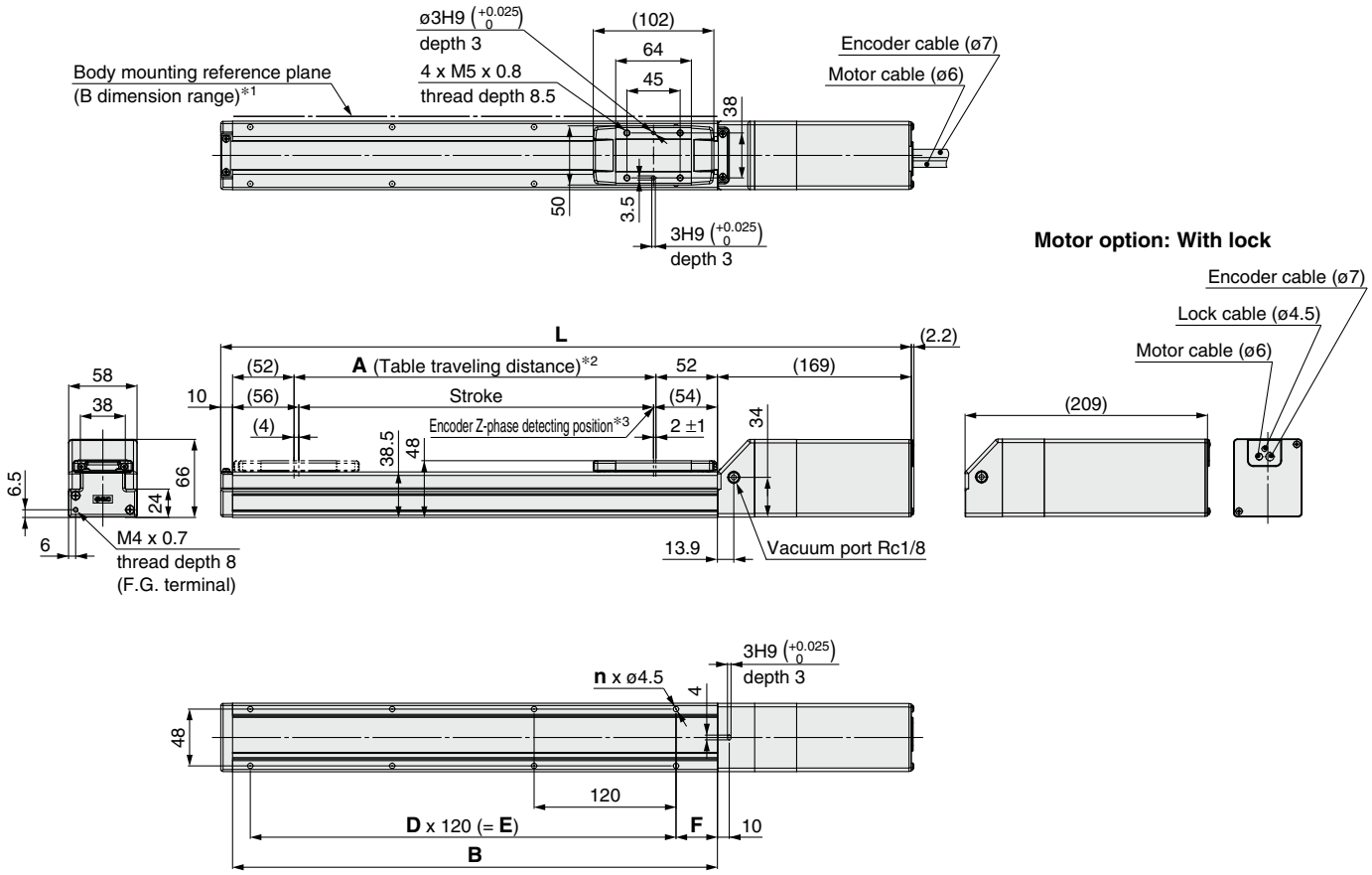

Positioning pin hole*4 (Option): Body bottom

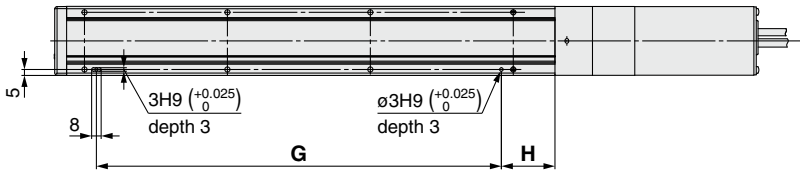

*1 When mounting the actuator using the body mounting reference plane, set the height of the opposite surface or pin to be 3 mm or more because of round chamfering. (Recommended height 5 mm)
In addition, be aware that surfaces other than the body mounting reference plane (B dimension range) may slightly protrude from the body mounting reference plane. Be sure to provide a clearance of 1 mm or more to avoid interference with workpieces, facilities, etc.
*2 This is the distance within which the table can move when it returns to origin.
Make sure workpieces mounted on the table do not interfere with the workpieces and facilities around the table.
*3 The Z-phase first detecting position from the stroke end of the motor side
*4 When using the body bottom positioning pin holes, do not simultaneously use the housing B bottom pin hole.

Dimensions [mm]

Model	L		A	B	n	D	E	F	G	H
	Without lock	With lock								
11-LEFS25□□-50□	339	379	56	160	4	—	—	20	100	30
11-LEFS25□□-100□	389	429	106	210	4	—	—		100	45
11-LEFS25□□-150□	439	479	156	260	4	—	—		100	45
11-LEFS25□□-200□	489	529	206	310	6	2	240		220	45
11-LEFS25□□-250□	539	579	256	360	6	2	240		220	45
11-LEFS25□□-300□	589	629	306	410	8	3	360		340	45
11-LEFS25□□-350□	639	679	356	460	8	3	360	35	340	45
11-LEFS25□□-400□	689	729	406	510	8	3	360		340	45
11-LEFS25□□-450□	739	779	456	560	10	4	480		460	45
11-LEFS25□□-500□	789	829	506	610	10	4	480		460	45
11-LEFS25□□-550□	839	879	556	660	12	5	600		580	45
11-LEFS25□□-600□	889	929	606	710	12	5	600		580	45

Dimensions: Ball Screw Drive

11-LEFS32

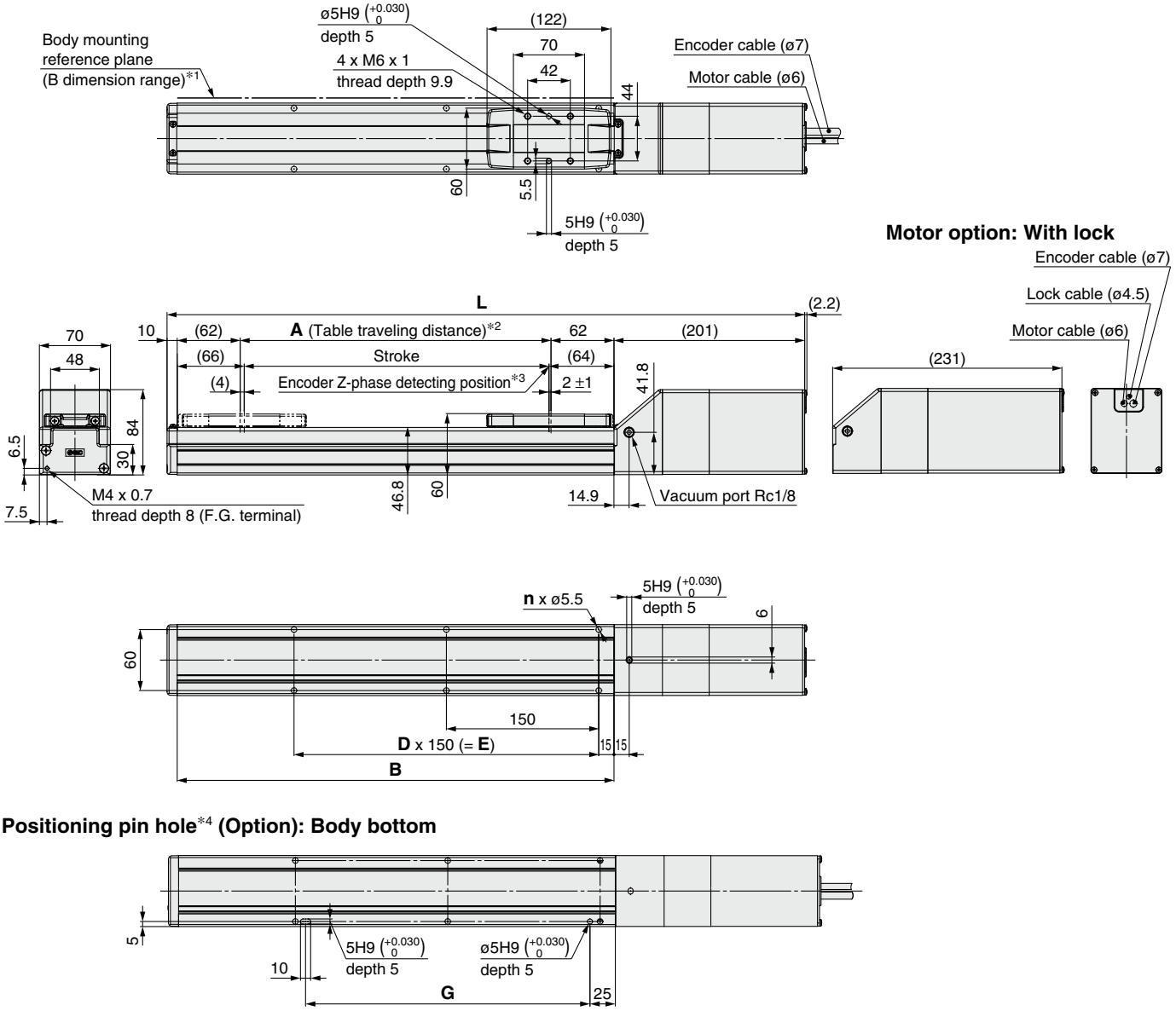

Positioning pin hole*4 (Option): Body bottom

*1 When mounting the actuator using the body mounting reference plane, set the height of the opposite surface or pin to be 3 mm or more because of round chamfering. (Recommended height 5 mm)
In addition, be aware that surfaces other than the body mounting reference plane (B dimension range) may slightly protrude from the body mounting reference plane. Be sure to provide a clearance of 1 mm or more to avoid interference with workpieces, facilities, etc.

*2 This is the distance within which the table can move when it returns to origin. Make sure workpieces mounted on the table do not interfere with the workpieces and facilities around the table.

*3 The Z-phase first detecting position from the stroke end of the motor side

*4 When using the body bottom positioning pin holes, do not simultaneously use the housing B bottom pin hole.

Dimensions [mm]

Model	L		A	B	n	D	E	G
	Without lock	With lock						
11-LEFS32□□-50□	391	421	56	180	4	—	—	130
11-LEFS32□□-100□	441	471	106	230	4	—	—	130
11-LEFS32□□-150□	491	521	156	280	4	—	—	130
11-LEFS32□□-200□	541	571	206	330	6	2	300	280
11-LEFS32□□-250□	591	621	256	380	6	2	300	280
11-LEFS32□□-300□	641	671	306	430	6	2	300	280
11-LEFS32□□-350□	691	721	356	480	8	3	450	430
11-LEFS32□□-400□	741	771	406	530	8	3	450	430
11-LEFS32□□-450□	791	821	456	580	8	3	450	430
11-LEFS32□□-500□	841	871	506	630	10	4	600	580
11-LEFS32□□-550□	891	921	556	680	10	4	600	580
11-LEFS32□□-600□	941	971	606	730	10	4	600	580
11-LEFS32□□-650□	991	1021	656	780	12	5	750	730
11-LEFS32□□-700□	1041	1071	706	830	12	5	750	730
11-LEFS32□□-750□	1091	1121	756	880	12	5	750	730
11-LEFS32□□-800□	1141	1171	806	930	14	6	900	880

Dimensions: Ball Screw Drive

11-LEFS40

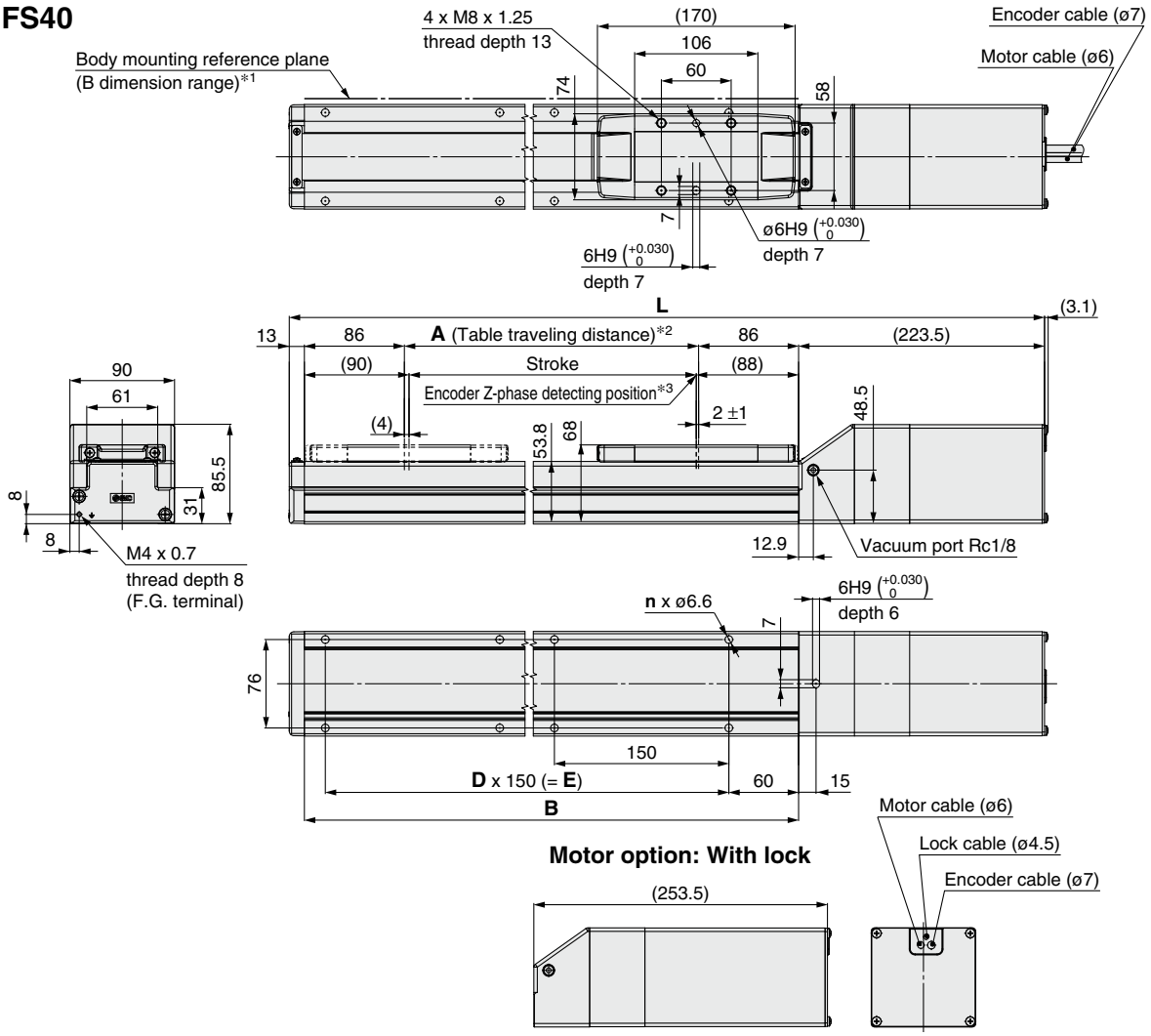

Motor option: With lock

Positioning pin hole*4 (Option): Body bottom

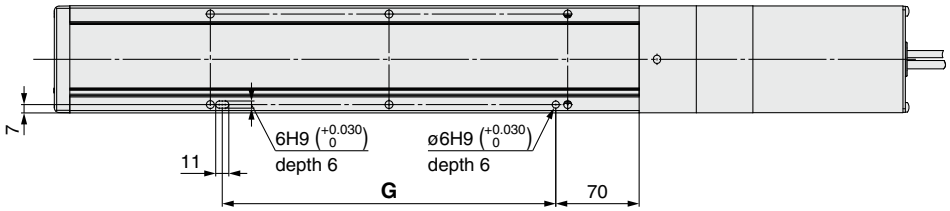

*1 When mounting the actuator using the body mounting reference plane, set the height of the opposite surface or pin to be 3 mm or more because of round chamfering.
(Recommended height 5 mm)
In addition, be aware that surfaces other than the body mounting reference plane (B dimension range) may slightly protrude from the body mounting reference plane. Be sure to provide a clearance of 1 mm or more to avoid interference with workpieces, facilities, etc.

*2 This is the distance within which the table can move when it returns to origin. Make sure workpieces mounted on the table do not interfere with the workpieces and facilities around the table.

*3 The Z-phase first detecting position from the stroke end of the motor side

*4 When using the body bottom positioning pin holes, do not simultaneously use the housing B bottom pin hole.

Dimensions [mm]

Model	L		A	B	n	D	E	G
	Without lock	With lock						
11-LEFS40□□-150□	564.5	594.5	156	328	4	—	150	130
11-LEFS40□□-200□	614.5	644.5	206	378	6	2	300	280
11-LEFS40□□-250□	664.5	694.5	256	428	6	2	300	280
11-LEFS40□□-300□	714.5	744.5	306	478	6	2	300	280
11-LEFS40□□-350□	764.5	794.5	356	528	8	3	450	430
11-LEFS40□□-400□	814.5	844.5	406	578	8	3	450	430
11-LEFS40□□-450□	864.5	894.5	456	628	8	3	450	430
11-LEFS40□□-500□	914.5	944.5	506	678	10	4	600	580
11-LEFS40□□-550□	964.5	994.5	556	728	10	4	600	580
11-LEFS40□□-600□	1014.5	1044.5	606	778	10	4	600	580
11-LEFS40□□-650□	1064.5	1094.5	656	828	12	5	750	730
11-LEFS40□□-700□	1114.5	1144.5	706	878	12	5	750	730
11-LEFS40□□-750□	1164.5	1194.5	756	928	12	5	750	730
11-LEFS40□□-800□	1214.5	1244.5	806	978	14	6	900	880
11-LEFS40□□-850□	1264.5	1294.5	856	1028	14	6	900	880
11-LEFS40□□-900□	1314.5	1344.5	906	1078	14	6	900	880
11-LEFS40□□-950□	1364.5	1394.5	956	1128	16	7	1050	1030
11-LEFS40□□-1000□	1414.5	1444.5	1006	1178	16	7	1050	1030

Support Guide

11-LEFG Series 11-LEFG16, 25, 32, 40

RoHS

The support guide was designed to support workpieces with significant overhang.

- As the dimensions are the same as the 11-LEF series body, installation is simple and contributes to a reduction in installation and assembly labor.
- The standard-equipped seal bands prevent grease from splashing and external foreign matter from entering.

Application example

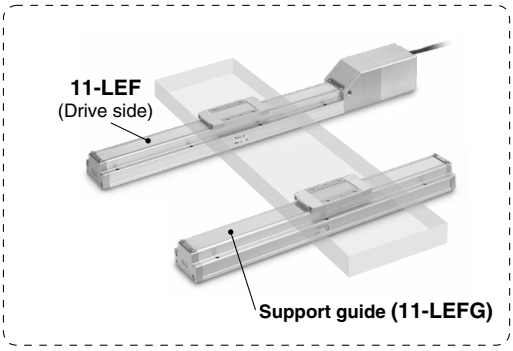

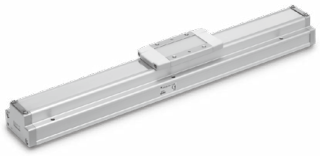

How to Order

11 – LEF G 32 – S – 200

- 11: Clean series
- G: Support guide
- 32: ❶
- S: ❷
- 200: ❸

❶ Size

16
25
32
40

❷ Type of mounting pitch

Symbol	11-LEFG16	11-LEFG25	11-LEFG32	11-LEFG40	Note
S	●	●	●	●	Ball screw drive Step motor/Servo motor (24 VDC)/AC servo motor

❸ Stroke [mm]

50	50
to	to
1000	1000

Applicable Stroke Table

Ball Screw Drive: S Step Motor (Servo/24 VDC) Servo Motor (24 VDC) AC Servo Motor

Model \ Stroke [mm]	50	100	150	200	250	300	350	400	450	500	550	600	650	700	750	800	850	900	950	1000
11-LEFG16-S	●	●	●	●	●	●	●	●	●	●	—	—	—	—	—	—	—	—	—	—
11-LEFG25-S	●	●	●	●	●	●	●	●	●	●	●	●	—	—	—	—	—	—	—	—
11-LEFG32-S	●	●	●	●	●	●	●	●	●	●	●	●	●	●	●	●	—	—	—	—
11-LEFG40-S	—	—	●	●	●	●	●	●	●	●	●	●	●	●	●	●	●	●	●	●

Weight

Ball Screw Drive: S Step Motor (Servo/24 VDC) Servo Motor (24 VDC) AC Servo Motor

Model \ Stroke [mm]	50	100	150	200	250	300	350	400	450	500	550	600	650	700	750	800	850	900	950	1000
11-LEFG16-S	0.25	0.31	0.37	0.43	0.49	0.55	0.61	0.67	0.73	0.79	—	—	—	—	—	—	—	—	—	—
11-LEFG25-S	0.56	0.67	0.78	0.89	1.00	1.11	1.22	1.33	1.44	1.55	1.66	1.77	—	—	—	—	—	—	—	—
11-LEFG32-S	0.92	1.08	1.23	1.4	1.56	1.72	1.88	2.04	2.20	2.36	2.52	2.88	2.84	3.00	3.16	3.22	—	—	—	—
11-LEFG40-S	—	—	2.07	2.29	2.51	2.72	2.94	3.15	3.37	3.58	3.80	4.01	4.23	4.44	4.66	4.87	5.09	5.30	5.52	5.73

Dimensions: Ball Screw Drive

11-LEFG16-S

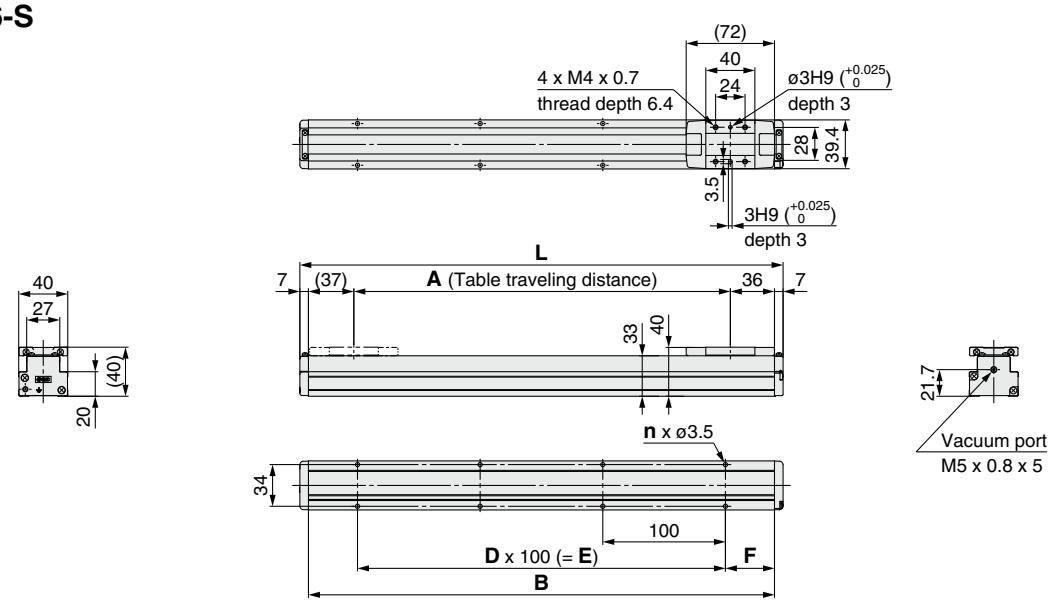

Dimensions [mm]

Model	L	A	B	n	D	E	F
11-LEFG16-S-50	144	57	130	4	—	—	15
11-LEFG16-S-100	194	107	180				40
11-LEFG16-S-150	244	157	230				
11-LEFG16-S-200	294	207	280	6	2	200	
11-LEFG16-S-250	344	257	330				
11-LEFG16-S-300	394	307	380	8	3	300	
11-LEFG16-S-350	444	357	430				
11-LEFG16-S-400	494	407	480	10	4	400	
11-LEFG16-S-450	544	457	530				
11-LEFG16-S-500	594	507	580	12	5	500	

11-LEFG25-S

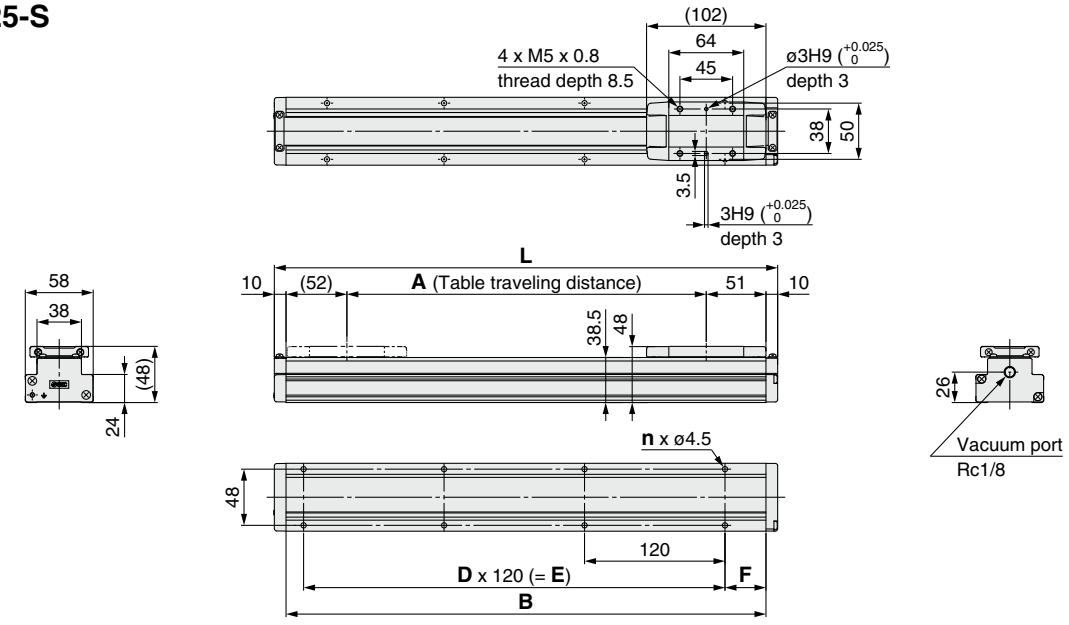

Dimensions [mm]

Model	L	A	B	n	D	E	F
11-LEFG25-S-50	180	57	160	4	—	—	20
11-LEFG25-S-100	230	107	210				35
11-LEFG25-S-150	280	157	260				
11-LEFG25-S-200	330	207	310	6	2	240	
11-LEFG25-S-250	380	257	360				
11-LEFG25-S-300	430	307	410	8	3	360	
11-LEFG25-S-350	480	357	460				
11-LEFG25-S-400	530	407	510				

Dimensions [mm]

Model	L	A	B	n	D	E	F
11-LEFG25-S-450	580	457	560	10	4	480	35
11-LEFG25-S-500	630	507	610				
11-LEFG25-S-550	680	557	660	12	5	600	
11-LEFG25-S-600	730	607	710				

Dimensions: Ball Screw Drive

11-LEFG32-S

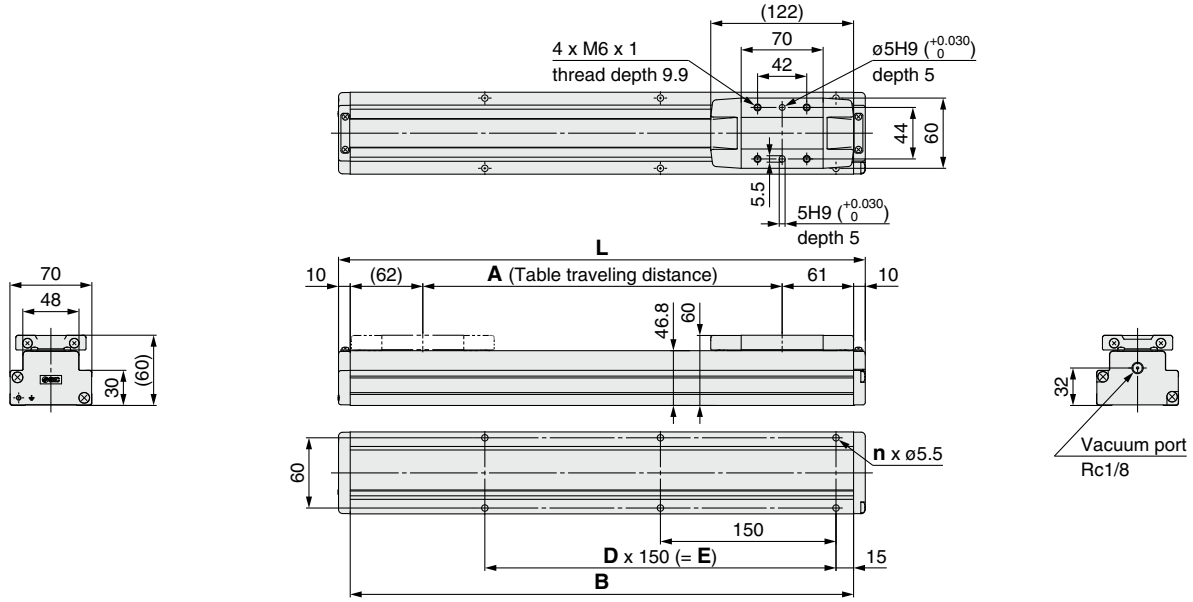

Dimensions [mm]

Model	L	A	B	n	D	E
11-LEFG32-S-50	200	57	180	4	—	—
11-LEFG32-S-100	250	107	230			
11-LEFG32-S-150	300	157	280			
11-LEFG32-S-200	350	207	330	6	2	300
11-LEFG32-S-250	400	257	380			
11-LEFG32-S-300	450	307	430			
11-LEFG32-S-350	500	357	480	8	3	450
11-LEFG32-S-400	550	407	530			
11-LEFG32-S-450	600	457	580			

Dimensions [mm]

Model	L	A	B	n	D	E
11-LEFG32-S-500	650	507	630	10	4	600
11-LEFG32-S-550	700	557	680			
11-LEFG32-S-600	750	607	730			
11-LEFG32-S-650	800	657	780	12	5	750
11-LEFG32-S-700	850	707	830			
11-LEFG32-S-750	900	757	880			
11-LEFG32-S-800	950	807	930	14	6	900

Dimensions: Ball Screw Drive

11-LEFG40-S

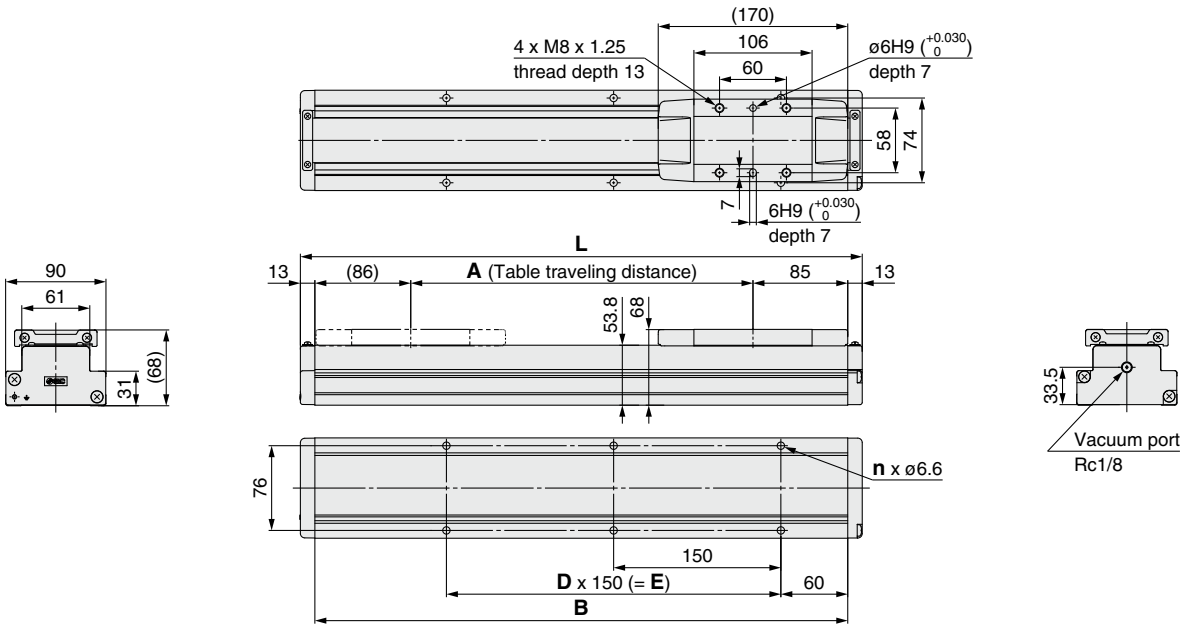

Dimensions [mm]

Model	L	A	B	n	D	E
11-LEFG40-S-150	354	157	328	4	—	150
11-LEFG40-S-200	404	207	378	6	2	300
11-LEFG40-S-250	454	257	428			
11-LEFG40-S-300	504	307	478			
11-LEFG40-S-350	554	357	528	8	3	450
11-LEFG40-S-400	604	407	578			
11-LEFG40-S-450	654	457	628			
11-LEFG40-S-500	704	507	678	10	4	600
11-LEFG40-S-550	754	557	728			
11-LEFG40-S-600	804	607	778			

Dimensions [mm]

Model	L	A	B	n	D	E
11-LEFG40-S-650	854	657	828	12	5	750
11-LEFG40-S-700	904	707	878			
11-LEFG40-S-750	954	757	928			
11-LEFG40-S-800	1004	807	978	14	6	900
11-LEFG40-S-850	1054	857	1028			
11-LEFG40-S-900	1104	907	1078			
11-LEFG40-S-950	1154	957	1128	16	7	1050
11-LEFG40-S-1000	1204	1007	1178			