5 Port Solenoid Valve

Plug Lead Type

New

CE RoHS

New Body Ported

- Valve width: **7.4 mm**
- Possible to drive cylinders: **Up to ø32** (300 mm/s)* * For details, refer to page 6.
- Power consumption: **0.35 W**
- Weight: **39 g*** * Single solenoid, built-in silencer type

Flow-rate characteristics* * For single/double solenoid

C [dm³/(s·bar)]: **0.6**

New
- Added 3-position closed center.
- Direct EXH outlet with built-in silencer (Option)

Single Unit

With One-touch fittings
Size can be changed. (For details, refer to page 27.)

Port size
Metric: ø2, ø3.2, ø4
Inch: ø1/8", ø5/32"

New Built-in silencer (Option)
(For details, refer to page 20.)

7.5 mm pitch
Manifold

With One-touch fittings
Size can be changed. (For details, refer to page 27.)

Port size
Metric: ø2, ø3.2, ø4
Inch: ø1/8", ø5/32"

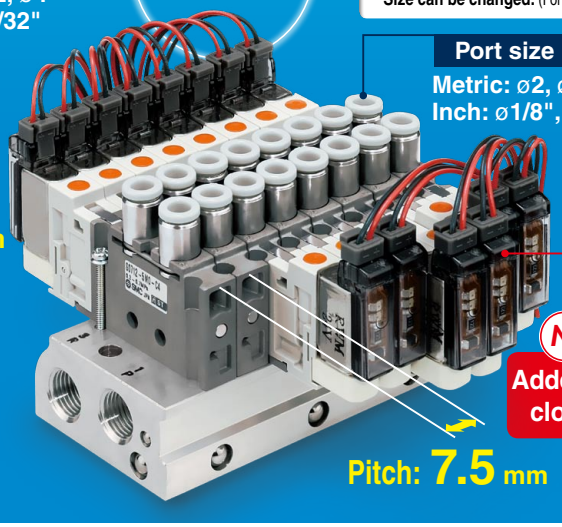

New Added 3-position closed center.

Pitch: 7.5 mm

Base Mounted

- Possible to drive cylinders: **Up to ø25** (300 mm/s)* * For details, refer to page 6.
- Power consumption: **0.35 W**

Flow-rate characteristics

C [dm³/(s·bar)]: **0.39**

New Added 3-position closed center.

Single Unit

Width 7.4 mm

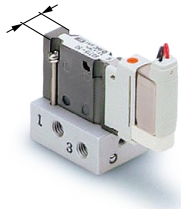

Manifold

7.5 mm pitch

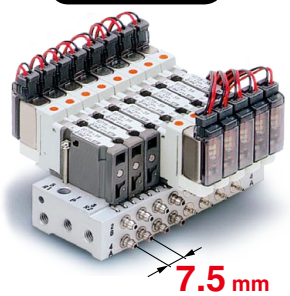

With barb fittings
(ø2, ø3.2, ø4)

8.5 mm pitch

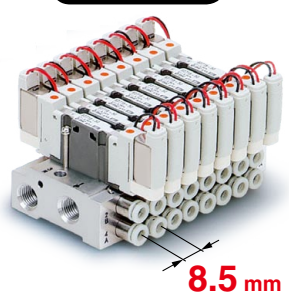

With One-touch fittings
(ø2, ø3.2, ø4, ø1/8", ø5/32")

Serial transmission/EX510

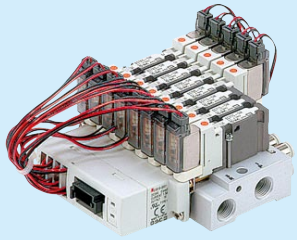

Series S0700

SMC

CAT.ES11-109A

4-Position Dual 3-Port Valve

- Two 3-port valves in one body.
- Independently operating 3-port valve at each side of A and B.
- Number of stations occupied for 3-port valve halved.
- Available as 4-position 5-port valve.

A side	B side	Symbol
N.C.	N.C.	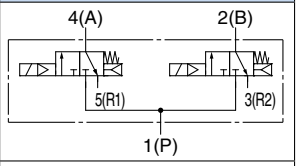
N.O.	N.O.	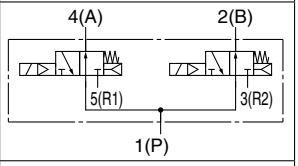
N.C.	N.O.	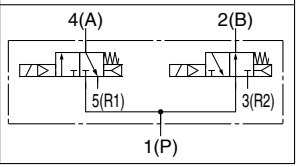

Adopted Direct Manual.

Possible to switch the main valve reliably by direct manual override even when pressure is below the operating pressure range during maintenance.

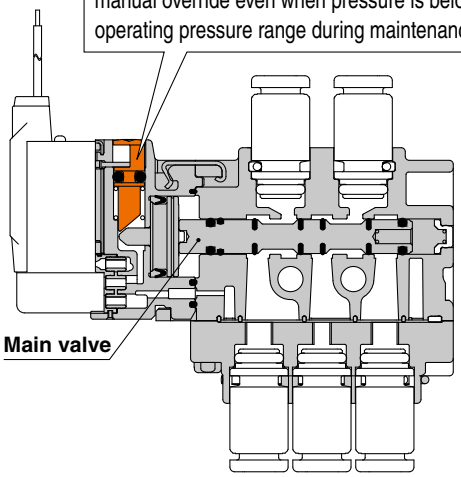

Applications

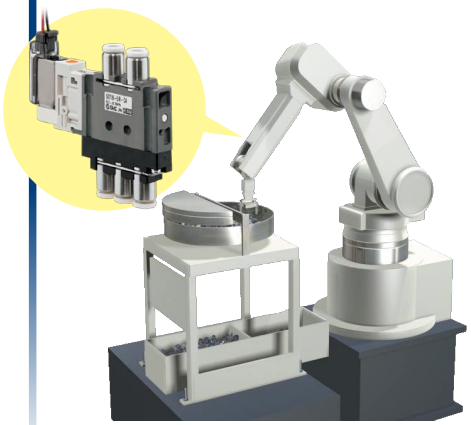

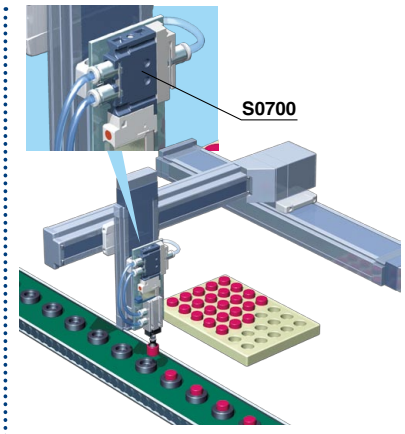

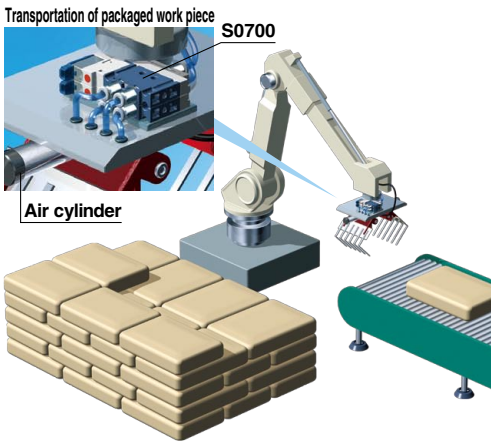

Plug-in Type Series Variations

For details, refer to the **WEB catalog** or the Best Pneumatics No. 1.

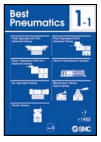

Slim Compact Plug-in Manifold Bar Base

Footprint: Reduced by **45%***

Height: Reduced by **20 mm***

* Compared with plug-in manifold stacking base

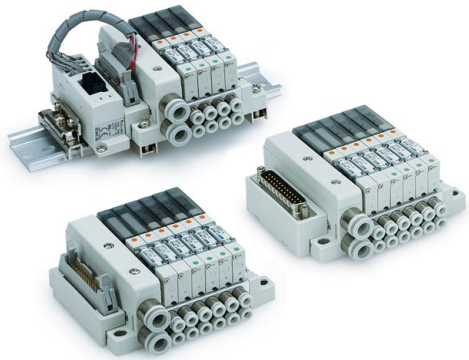

Plug-in Manifold Stacking Base

Many Combinations Available to Fit Your Needs

- Serial transmission
  EX180/EX260/EX250
  EX600/EX500/EX510
- D-sub connector
- Flat ribbon cable
- PC wiring system compatible flat ribbon cable
- Terminal block box
- Lead wire
- Circular connector

Variations/Options

Base model				Body Ported	Base Mounted		Single Unit	
				Manifold pitch: 7.5 mm	Manifold pitch: 8.5 mm	Manifold pitch: 7.5 mm	Body Ported	Base Mounted
				Page 10	Page 15	Page 15	Page 7	Page 12
				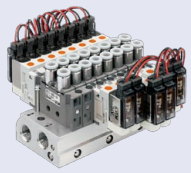	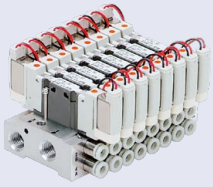			
				SS0752-□□C	SS0755-□C□C	SS0755-□V□C	S07□6-5□-□-□	S07□5-5□-M5
Piping specifications	Port size	1(P), 3(R)	M5			●		●
			Rc1/8	●	●			
			ø2				●	
			ø4				●	
			ø1/8"				●	
			ø5/32"				●	
		4(A), 2(B)	M3			●		
			M5		●			●
			ø2	●	●	● Note 1)	●	
			ø3.2		●	● Note 1)		
			ø4	●	●	● Note 1)	●	
			ø1/8"	●	●		●	
			ø5/32"	●	●		●	
Type of wiring				C Kit: Connector	C Kit: Connector S Kit: Serial transmission (EX510)	C Kit: Connector	Connector kit	Connector kit
Direct EXH outlet with built-in silencer				—	—	—	● Page 20	—
Blanking plate assembly				● Page 20	● Page 20	● Page 20	—	—
External pilot				● Note 2) Page 20	● Note 2) Page 20	● Note 2) Page 20	● Note 2) Page 20	● Note 2) Page 20
Individual SUP spacer				—	● Page 20	● Page 20	—	—
Individual EXH spacer				—	● Page 21	● Page 21	—	—
Port plug				—	● Page 21	—	—	—
Blanking plug				● Page 21	● Page 21	—	● Page 21	● Page 21
Silencer (For manifold EXH port)				● Page 21	● Page 21	● Page 21	—	—
Double check block (Separated)				● Page 22	● Page 22	● Page 22	● Page 22	● Page 22

Note 1) For barb fittings
Note 2) Not compatible with dual 3-port valves.

INDEX

Valve Specifications ..... Page 4
Manifold/Single Unit Specifications ..... Page 5
Manifold Flow-rate Characteristics ..... Page 5
Cylinder Speed Chart ..... Page 6
Symbol ..... Page 6

Body Ported Bar Base

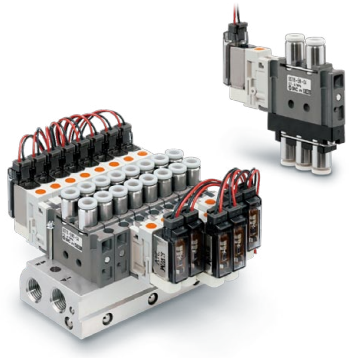

Single Unit ..... Page 7
Manifold Individual Wiring C Kit ..... Page 10

Base Mounted Bar Base

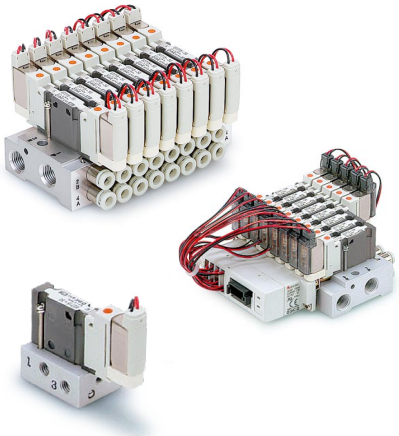

Single Unit ..... Page 12
Manifold Individual Wiring C Kit ..... Page 15
Serial Transmission S Kit ..... Page 18

Options ..... Page 20
Construction ..... Page 23
Replacement Parts ..... Page 25
Specific Product Precautions ..... Page 26

Series S0700
Valve Specifications

Valve Specifications

Model

Type			Type of actuation	Model	Flow-rate characteristics						Response time [msec] Note 2)	Weight [g] Note 3)
					1→4/2 (P→A/B)			4/2→5/3 (A/B→R1/R2)				
					C [dm³/(s·bar)]	b	Cv	C [dm³/(s·bar)]	b	Cv		
Body Ported	Single Unit Page 7	2-position	Single	S0716	0.62	0.44	0.18	0.60	0.41	0.17	22 or less	39
			Double	S0726	0.62	0.44	0.18	0.60	0.41	0.17	10 or less	47
		3-pos.	3-position closed center	S0736	0.54	0.37	0.15	0.50	0.38	0.14	45 or less	47
		4-pos.	Dual 3-port valve	S07$^{A}_{B}$6$_{C}$	0.58	0.39	0.16	0.67	0.37	0.18	25 or less	49
	Manifold Bar Base Page 10	2-position	Single	S0712	0.51	0.40	0.15	0.64	0.33	0.15	22 or less	34
			Double	S0722	0.51	0.40	0.15	0.64	0.33	0.15	10 or less	42
		3-pos.	3-position closed center	S0732	0.54	0.37	0.10	0.46	0.38	0.08	45 or less	42
		4-pos.	Dual 3-port valve	S07$^{A}_{B}$2$_{C}$	0.57	0.39	0.15	0.55	0.37	0.15	25 or less	44
Base Mounted	Single Unit Page 12	2-position	Single	S0715	0.39	0.39	0.11	0.37	0.39	0.10	12 or less	28
			Double	S0725	0.39	0.39	0.11	0.37	0.39	0.10	10 or less	36
	Manifold Bar Base Page 15	3-pos.	3-position closed center	S0735	0.29	0.29	0.07	0.26	0.21	0.06	28 or less	38
		4-pos.	Dual 3-port valve	S07$^{A}_{B}$5$_{C}$	0.34	0.34	0.09	0.33	0.33	0.08	12 or less	36

Note 1) Values for cylinder port fitting port size C4. The flow rate of a body ported single valve is the SUP and EXH port C4 value.
Note 2) Based on JIS B 8375-1993 (Supply pressure: 0.5 MPa, with indicator light and surge voltage suppressor, clean air. This will change depending on pressure and air quality.) The value when ON for the double type.
Note 3) The weight of a single unit of the valve includes a built-in EXH port silencer.
Note 4) The flow rate of the body ported product with an external pilot decreases by 10%.
Note 5) The flow rate of the body ported product with a built-in silencer decreases by 30%.

Specifications

Valve specifications	**Valve construction**		Rubber seal
	Fluid		Air/Inert gas
	Maximum operating pressure		0.7 MPa
	Minimum operating pressure		0.2 MPa
	Ambient and fluid temperature		−10 to 50°C Note 1)
	Maximum operating cycle		5 Hz
	Pilot valve exhaust method		Individual exhaust
	Pilot valve manual override		Push type
	Lubrication		Not required
	Impact/Vibration resistance Note 2)		30/100 m/s²
	Enclosure		IP40
	Noise reduction (Built-in silencer)		20 dB(A) Note 3)
Electrical specifications	**Coil rated voltage**		24 VDC
	Allowable voltage fluctuation		±10% of rated voltage
	Coil insulation type		Class B or equivalent
	Power consumption (Current)	**24 VDC**	DC 0.35 W (15 mA)

Note 1) Use dry air to prevent condensation when operating at low temperatures.
Note 2) Impact resistance: No malfunction occurred when it is tested with a drop tester in the axial direction and at the right angles to the main valve and armature in both energized and de-energized states every once for each condition.
Vibration resistance: No malfunction occurred in a one-sweep test between 8.3 and 2000 Hz. Test was performed at both energized and de-energized states in the axial direction and at the right angles to the main valve and armature.
Note 3) The value may vary depending on the pneumatic circuit or pressure.

Manifold/Single Unit Specifications

	Model	Piping specifications: Port size 1(P), 3(R)	Piping specifications: Port size 4(A), 2(B)	Type of connection	Note 1) Applicable stations	Note 3) 5-station weight [g]	Note 3) Addition per station [g]
Body Ported	Manifold pitch: 7.5 mm Page 10 SS0752-□□C	Rc1/8	C2 (ø2) C4 (ø4) N1 (ø1/8") N3 (ø5/32")	C Kit: Connector	Max. 20 stations	76	10
Base Mounted	Manifold pitch: 8.5 mm Page 15 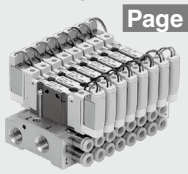 SS0755-□C□C	Rc1/8	M5 thread C2 (ø2) C3 (ø3.2) C4 (ø4) N1 (ø1/8") N3 (ø5/32")	C Kit: Connector	Max. 20 stations	115	20
				S Kit: Serial transmission (EX510)	Max. 16 stations	Note 2) 115	20
	Manifold pitch: 7.5 mm Page 15 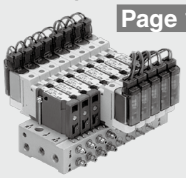 SS0755-□V□C	M5 thread	M3 (M3 thread) V2 (ø2 Barb fitting) V3 (ø3.2 Barb fitting) V4 (ø5 Barb fitting)	C Kit: Connector	Max. 20 stations	75	10
Single Unit Body Ported	Page 7 S07□6-5□-□-□	C2 (ø2) C4 (ø4) N1 (ø1/8") N3 (ø5/32")	C2 (ø2) C4 (ø4) N1 (ø1/8") N3 (ø5/32")	Connector kit	—	—	—
Single Unit Base Mounted	Page 12 S07□5-5□-M5	M5 thread	M5 thread	Connector kit	—	14 Note 4)	

Note 1) Maximum stations in the case of mixed single and double wiring (special wiring specifications)
Note 2) Differs depending on the serial unit type. For details, refer to the **WEB catalog** or the Best Pneumatics No. 1.
Note 3) Weight excluding valve. For valve weight, refer to page 4.
Note 4) Weight of sub-plate only. For valve weight, refer to page 4.

Manifold Flow-rate Characteristics

Model	Port size 1, 5, 3 (P, EA, EB)	Port size 4, 2 (A, B)	Flow-rate characteristics 1→4/2 (P→A/B) C [dm³/(s·bar)]	1→4/2 (P→A/B) Cv	4/2→5/3 (A/B→EA/EB) C [dm³/(s·bar)]	4/2→5/3 (A/B→EA/EB) Cv
SS0752-□□C	1/8	C4	2.6	0.71	2.7	0.75
SS0755-□C□C	1/8	C4	2.1	0.58	1.9	0.53
SS0755-□V□C	M5 thread	V4	0.86	0.24	0.86	0.24

∗ When 5-station single solenoids are operated simultaneously.

Cylinder Speed Chart

Applicable cylinder speed	Type	Applicable cylinder ø6	ø10	ø16	ø20	ø25	ø32	ø40	ø50
100 mm/s or less	**Body Ported**								
	Base Mounted								
300 mm/s or less	**Body Ported**								
	Base Mounted								
500 mm/s or less	**Body Ported**								
	Base Mounted								

[Common conditions]
- Pressure: 0.5 MPa
- Piping length: 1 m
- Load ratio: 50%
- Stroke: 200 mm

∗ Use as a guide for selection.
Please confirm the actual conditions with SMC Model Selection Software.

Symbol

Model	Type of actuation	Symbol
S0712 S0716 S0715	2-position single	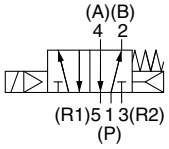
S0722 S0726 S0725	2-position double	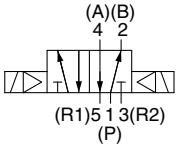
S0732 S0736 S0735	3-position closed center	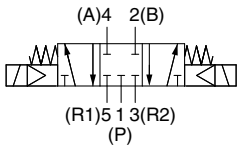
S07A2 S07A6 S07A5	4-position dual 3-port N.C. + N.C. (Exhaust center)	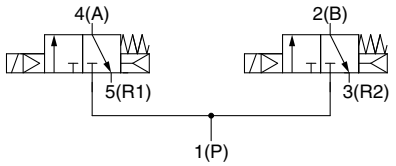
S07B2 S07B6 S07B5	4-position dual 3-port N.O. + N.O. (Pressure center)	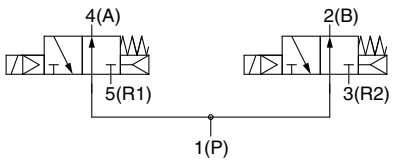
S07C2 S07C6 S07C5	4-position dual 3-port N.C. + N.O.	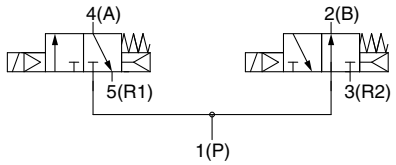

Plug Lead Type

Body Ported

Single Unit

Series S0700

CE RoHS

How to Order Valves

S07 1 6 S – 5 G – C4

Type of actuation

Symbol	Specifications
1	2-position single
2	2-position double
3	3-position closed center
A	4-position dual 3-port (N.C. + N.C.) (Exhaust center)
B	4-position dual 3-port (N.O. + N.O.) (Pressure center)
C	4-position dual 3-port (N.C. + N.O.)

Body Ported

Note) It cannot be mounted on a manifold.

Function

Symbol	Type	
Nil	EXH port: With One-touch fitting	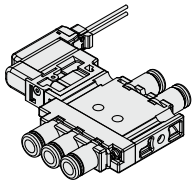
S	EXH outlet: With built-in silencer Note 1)	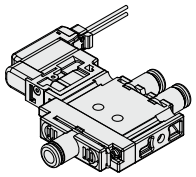
R	External pilot Note 2)	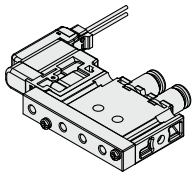

Note 1) Refer to page 20.
Note 2) Not compatible with dual 3-port valves.

Voltage

Symbol	Type
5	24 VDC
6	12 VDC

P, E port/A, B port size

Symbol	Port size
C2	ø2 One-touch fitting
C4	ø4 One-touch fitting
N1	ø1/8" One-touch fitting
N3	ø5/32" One-touch fitting

Note) For external pilots, the P, E, and X ports are size M3. (Refer to page 9.)

Electrical entry

Symbol	Specifications	Configuration
G	Grommet	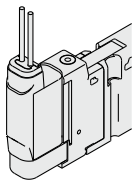
M	M-type plug connector, with 300 mm lead wire (With light/surge voltage suppressor)	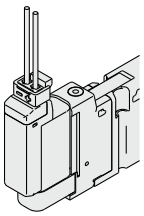
MO	M-type plug connector, without lead wire (With light/surge voltage suppressor)	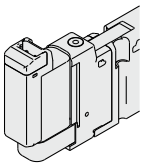

Dimensions

2-Position Single
Grommet: S0716-□G-□

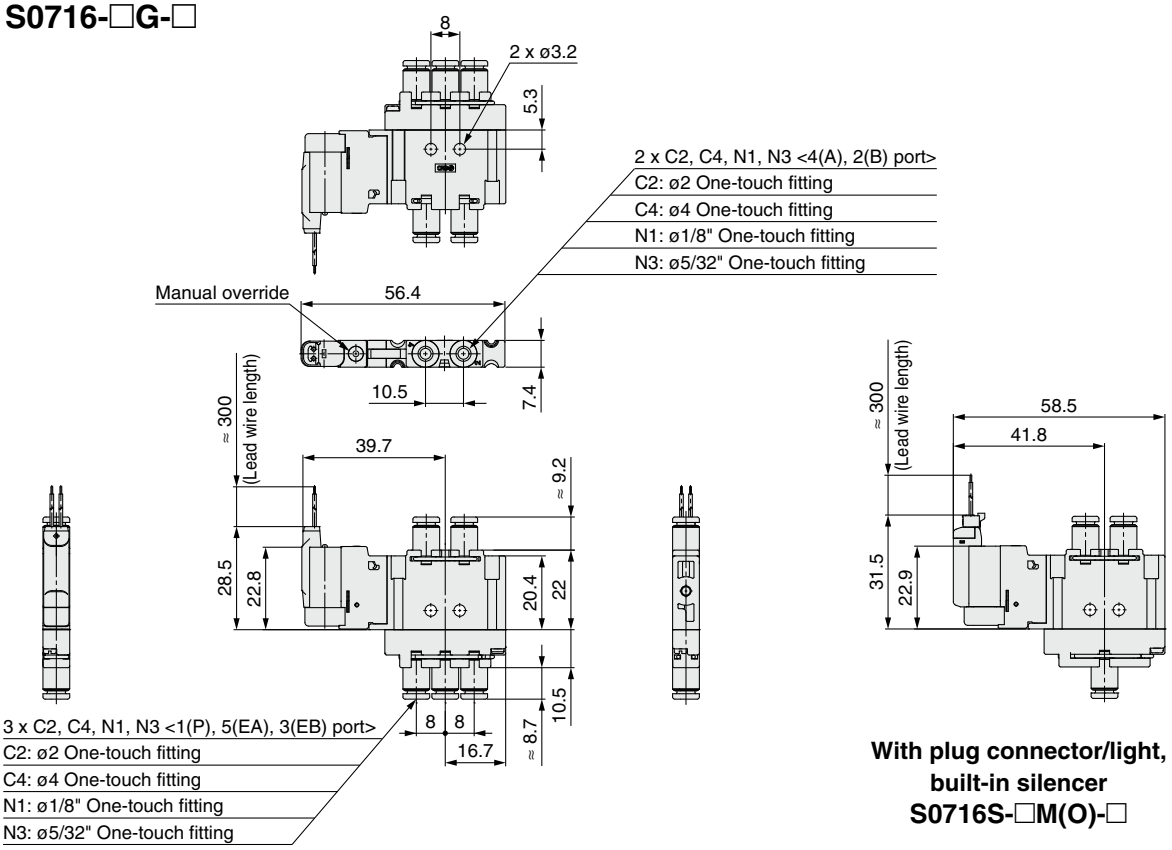

With plug connector/light, built-in silencer
S0716S-□M(O)-□

2-Position Double/4-Position Dual 3-Port
Grommet: S07$^{2}_{B}{}^{A}_{C}$6-□G-□

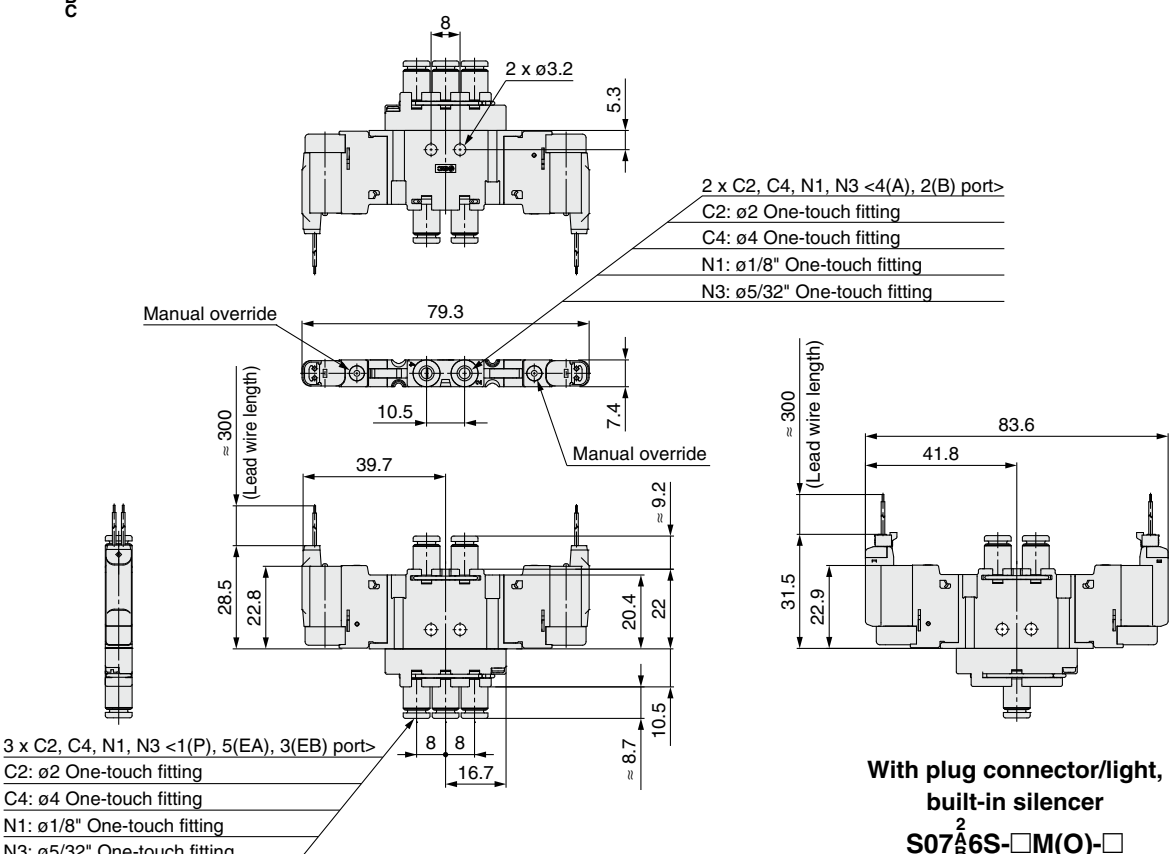

With plug connector/light, built-in silencer
S07$^{2}_{B}{}^{A}_{C}$6S-□M(O)-□

Dimensions

3-Position Closed Center
Grommet: S0736-□G-□

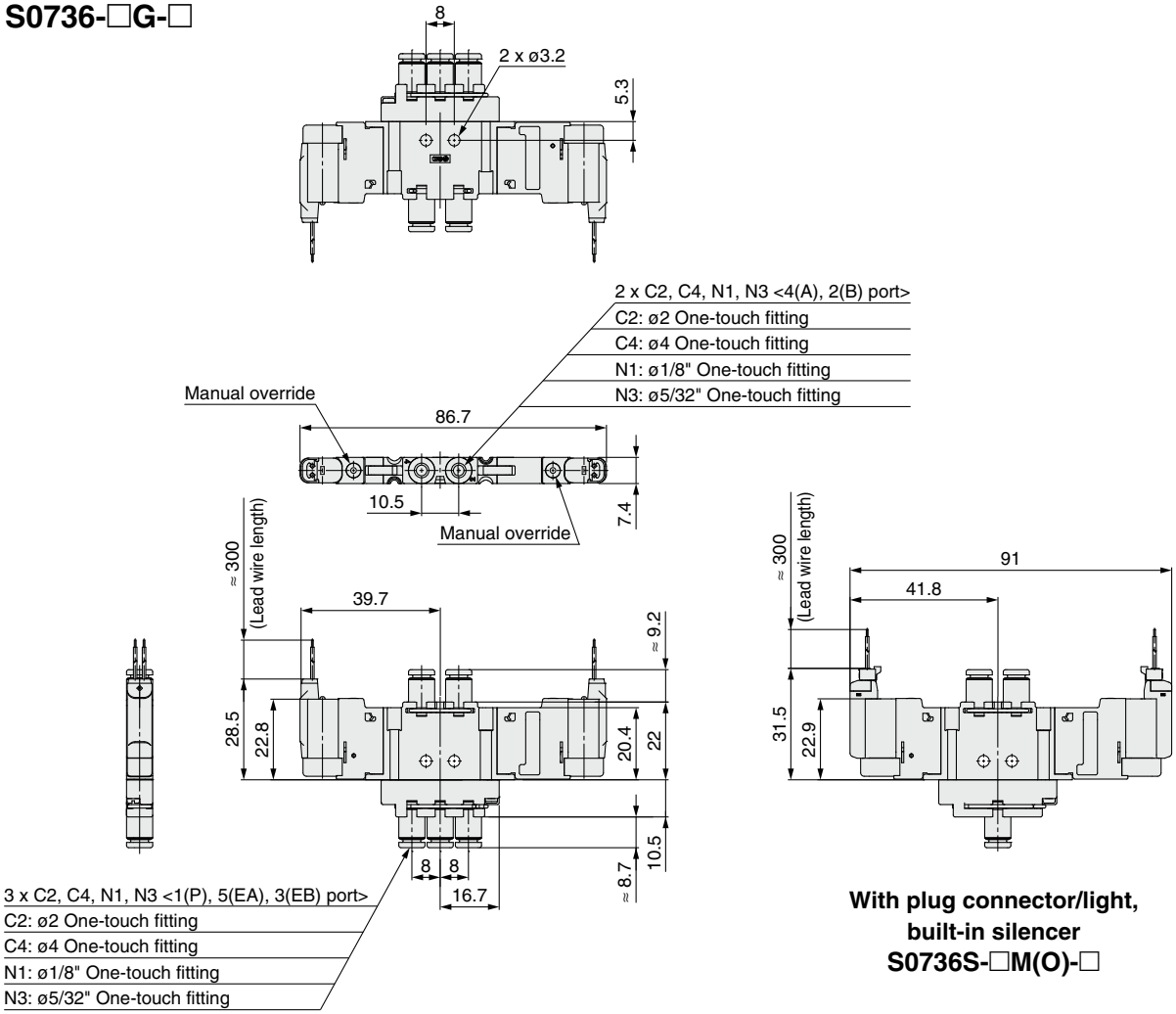

With plug connector/light, built-in silencer
S0736S-□M(O)-□

External Pilot
2-Position Single
Grommet (G): S0716R-□G-□-□

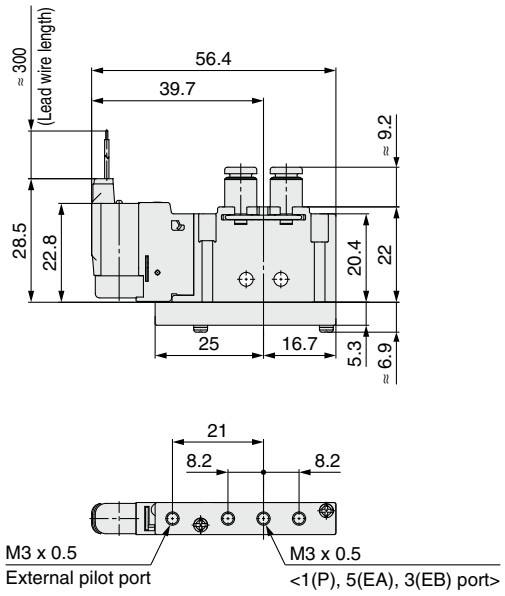

2-Position Double/3-Position Closed Center
Grommet (G): S07$\frac{2}{3}$6R-□G-□-□

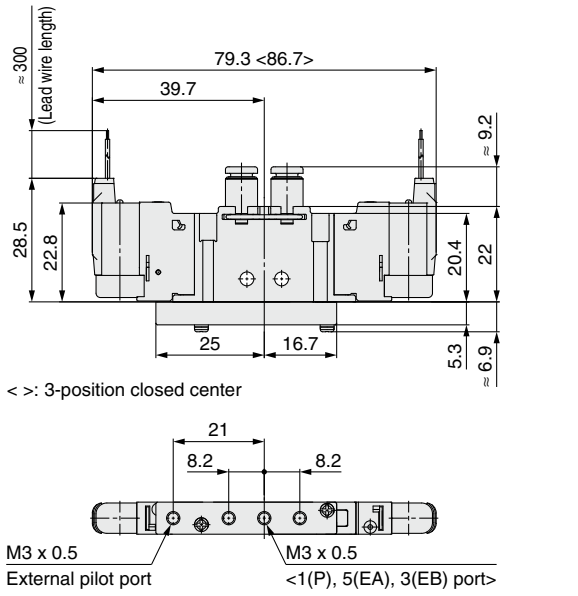

∗ Other dimensions are the same as the internal pilot.

Plug Lead Type

Body Ported Manifold Bar Base Individual Wiring: C Kit

Series S0700

CE RoHS

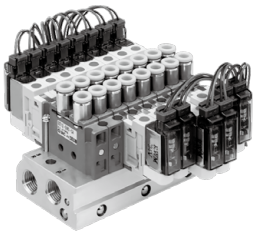

How to Order Manifold

SS07 5 2 – 08 C – □ – □

5 port

Body Ported

Stations

Symbol	Stations
02	2 stations
03	3 stations
⋮	⋮
20	20 stations

Note) Max. 20 stations

Option

Symbol	Type
Nil	None
R	External pilot

Individual wiring

Thread type
1(P), 3/5(R) port

Nil	Rc
00N	NPT
00T	NPTF
00F	G

How to Order Valves

S07 1 2 □ – 5 G – C4

Body Ported Manifold Bar Base

Note) The valve cannot be used as a stand-alone unit.

Voltage

Symbol	Type
5	24 VDC
6	12 VDC

Function

Symbol	Type
Nil	Standard
R	External pilot Note)

Note) Not compatible with dual 3-port valves.

Electrical entry

Symbol	Specifications
G	Grommet
M	M-type plug connector, with 300 mm lead wire (With light/surge voltage suppressor)
MO	M-type plug connector, without lead wire (With light/surge voltage suppressor)

Type of actuation

Symbol	Specifications
1	2-position single
2	2-position double
3	3-position closed center
A	4-position dual 3-port (N.C. + N.C.) (Exhaust center)
B	4-position dual 3-port (N.O. + N.O.) (Pressure center)
C	4-position dual 3-port (N.C. + N.O.)

Cylinder port size

Symbol	Port size
C2	ø2 One-touch fitting
C4	ø4 One-touch fitting
N1	ø1/8" One-touch fitting
N3	ø5/32" One-touch fitting

How to Order Manifold Assembly

Specify the part numbers for valves and options together beneath the manifold base part number.

<Example>

Connector kit

SS0752-08C ····· 1 set–Manifold base part no.
*** S0712-5G-C4 ····· 2 sets–Valve part no. (Stations 1 to 2)**
*** S0722-5G-C4 ····· 2 sets–Valve part no. (Stations 3 to 4)**
*** S0732-5G-C4 ····· 2 sets–Valve part no. (Stations 5 to 6)**
*** S07A2-5G-C4 ····· 2 sets–Valve part no. (Stations 7 to 8)**

Prefix the asterisk to the part numbers of the solenoid valve etc.

Write sequentially from the 1st station on the D side. When part numbers written collectively are complicated, specify on the manifold specification sheet.

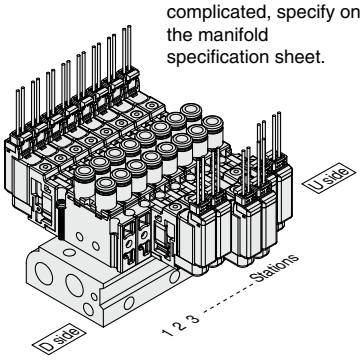

Dimensions

SS0752-□C

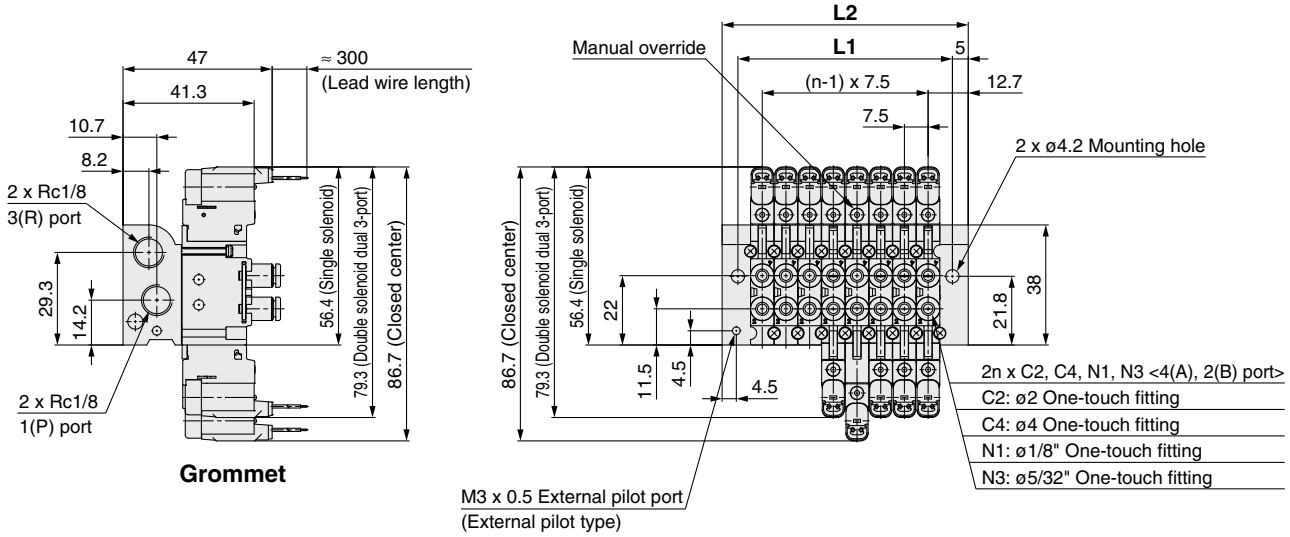

Grommet

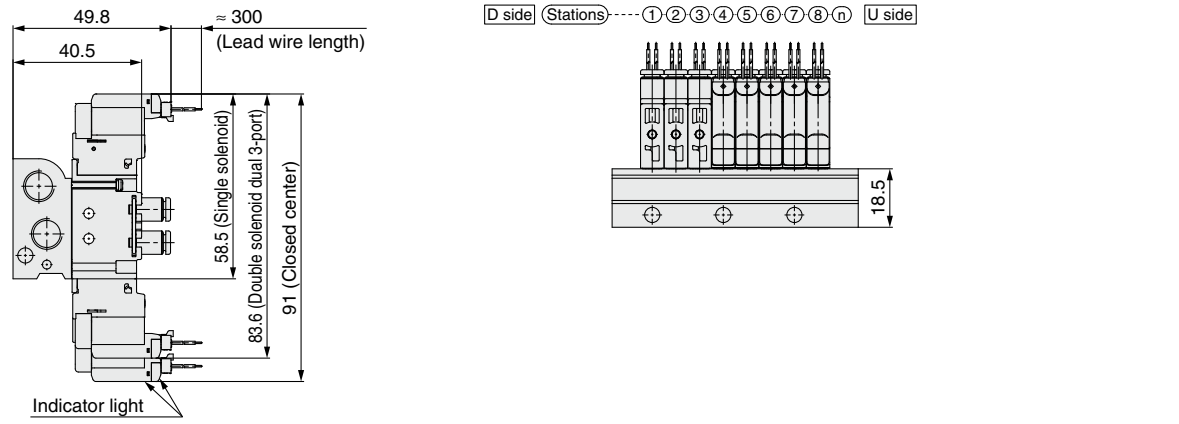

With plug connector/light

Dimensions

Formula L1 = 7.5n + 7.9, L2 = 7.5n + 17.9 n: Station (Maximum 20 stations)

L \ n	1	2	3	4	5	6	7	8	9	10	11	12	13	14	15	16	17	18	19	20
L1	15.4	22.9	30.4	37.9	45.4	52.9	60.4	67.9	75.4	82.9	90.4	97.9	105.4	112.9	120.4	127.9	135.4	142.9	150.4	157.9
L2	25.4	32.9	40.4	47.9	55.4	62.9	70.4	77.9	85.4	92.9	100.4	107.9	115.4	122.9	130.4	137.9	145.4	152.9	160.4	167.9

Plug Lead Type

Base Mounted

Single Unit

Series S0700

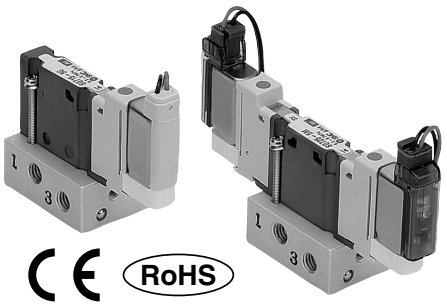

CE RoHS

How to Order Valves

S07 1 5 ☐ – 5 G – M5

Type of actuation

Symbol	Specifications
1	2-position single
2	2-position double
3	3-position closed center
A	4-position dual 3-port (N.C. + N.C.) [Exhaust center]
B	4-position dual 3-port (N.O. + N.O.) [Pressure center]
C	4-position dual 3-port (N.C. + N.O.)

Note) For symbol, refer to page 6.

Base Mounted

Function

Symbol	Type
Nil	Standard
R	External pilot Note)

Note) Not compatible with dual 3-port valves.

Voltage

Symbol	Type
5	24 VDC
6	12 VDC

With/Without sub-plate

Symbol	Type
Nil	Without sub-plate
M5	With sub-plate

Electrical entry

Symbol	Specifications	Configuration
G	Grommet	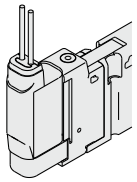
M	M-type plug connector, with lead wire (With light/surge voltage suppressor)	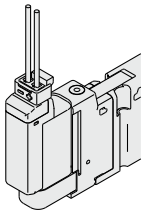
MO	M-type plug connector, without lead wire (With light/surge voltage suppressor)	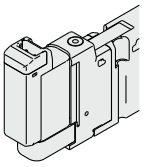

Dimensions

2-Position Single
Grommet: S0715(R)-□G-M5

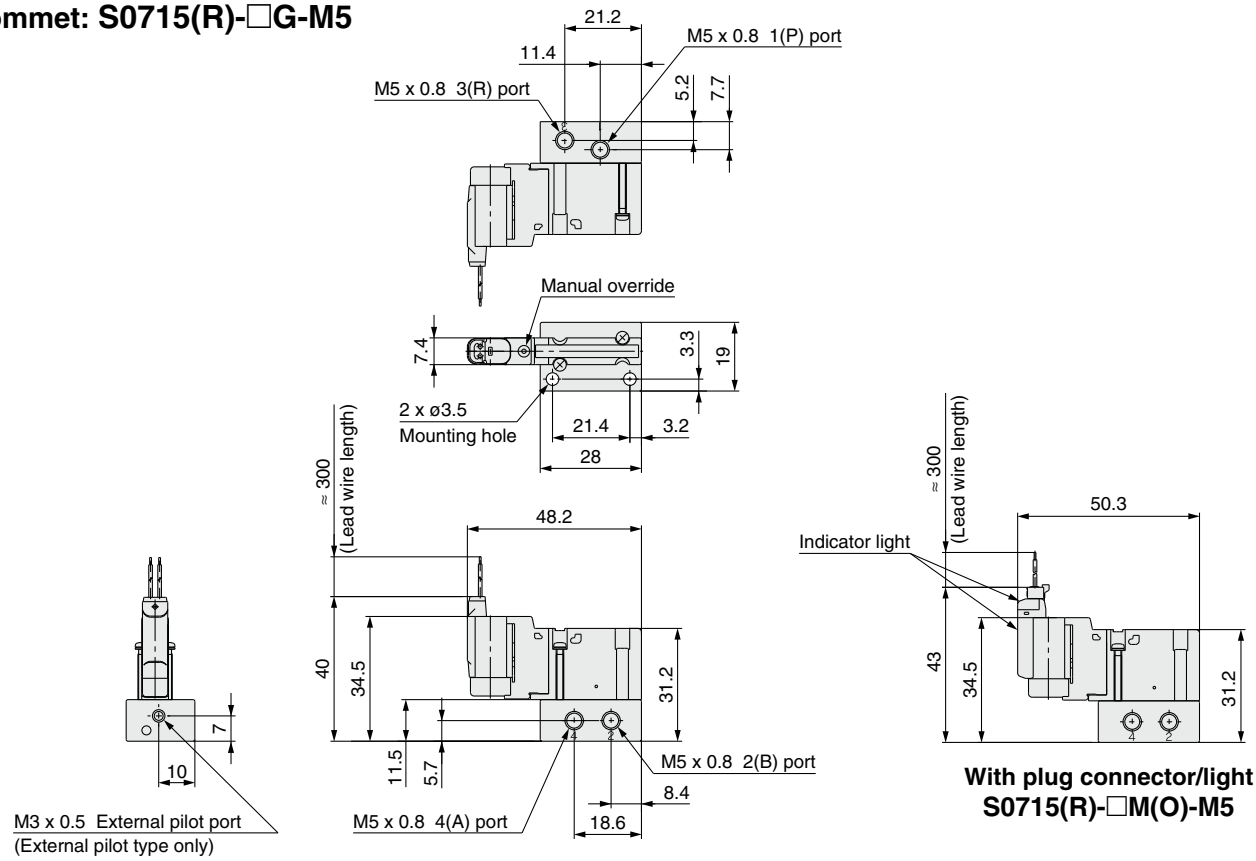

With plug connector/light
S0715(R)-□M(O)-M5

2-Position Double/4-Position Dual 3-Port
Grommet: S07$^{2}_{B}{}^{A}_{C}$5(R)-□G-M5

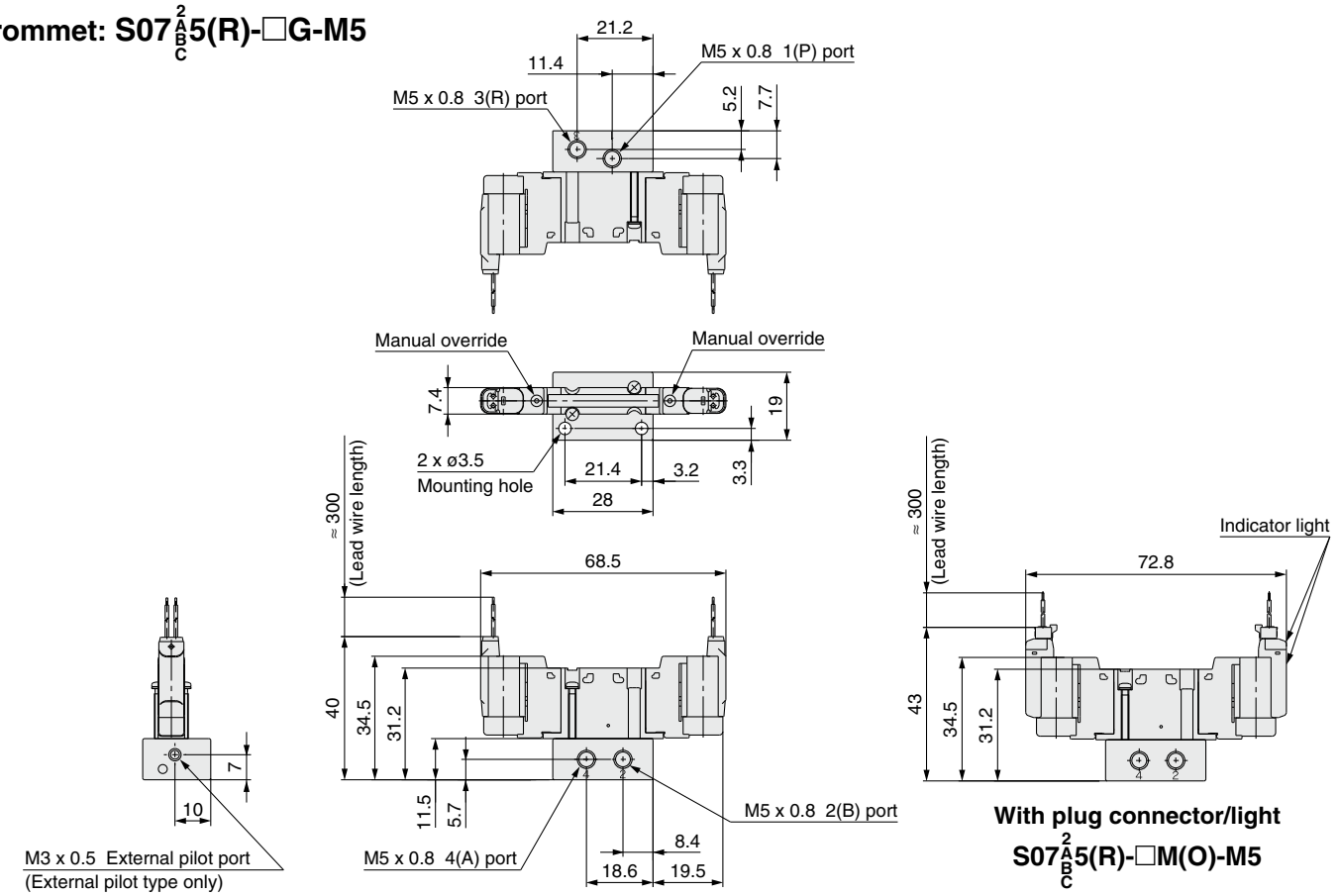

With plug connector/light
S07$^{2}_{B}{}^{A}_{C}$5(R)-□M(O)-M5

Dimensions

3-Position Closed Center
Grommet: S0735(R)-□G-M5

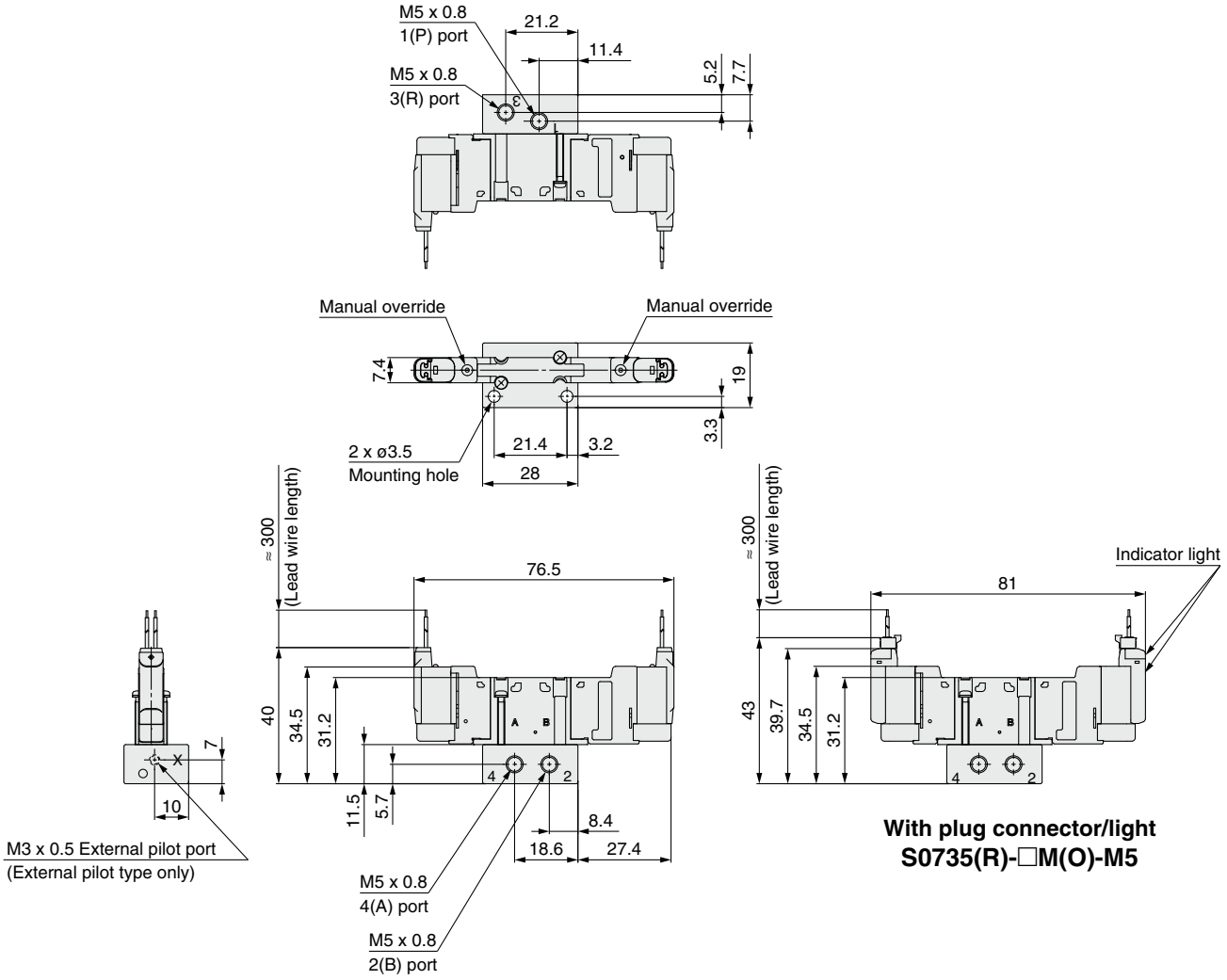

With plug connector/light
S0735(R)-□M(O)-M5

Plug Lead Type

Base Mounted Manifold Bar Base
Individual Wiring: C Kit
Series S0700

CE RoHS

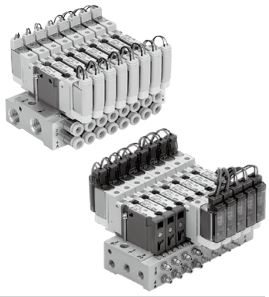

How to Order Manifold

SS0755 − 08 C4 □ C − □

Base Mounted

Stations

Symbol	Stations
02	2 stations
⋮	⋮
20	20 stations

Option

Symbol	Type
Nil	None
R Note)	External pilot

Note) For details, refer to page 20.
∗ **For manifold optional parts, refer to pages 20 to 22.**

Cylinder port size

Symbol	Port size		Manifold pitch
M5	M5 thread	Metric	8.5
C2	With ø2 One-touch fitting		
C3	With ø3.2 One-touch fitting		
C4	With ø4 One-touch fitting		
CM	Mixed sizes and with port plug Note)		
N1	With ø1/8" One-touch fitting	Inch	
N3	With ø5/32" One-touch fitting		
NM	Mixed sizes and with port plug Note)		
M3	M3 thread	Metric	7.5
V2	ø2 Barb fitting		
V3	ø3.2 Barb fitting		
V4	ø4 Barb fitting		
VM	Mixed sizes and with port plug Note)		

Note) Specify "Mixed sizes and with port plug" on the manifold specification sheet.

Connector individual wiring

P, R port thread type

Symbol	Manifold pitch	
	8.5	7.5
Nil	Rc	M5
F	G	
N	NPT	
T	NPTF	

How to Order Valves

S07 1 5 □ − 5 G

Type of actuation

Symbol	Specifications
1	2-position single
2	2-position double
3	3-position closed center
A	4-position dual 3-port (N.C. + N.C.) [Exhaust center]
B	4-position dual 3-port (N.O. + N.O.) [Pressure center]
C	4-position dual 3-port (N.C. + N.O.)

Note) For symbol, refer to page 6.

Base Mounted Manifold

Function

Symbol	Type
Nil	Standard
R	External pilot Note)

Note) Not compatible with dual 3-port valves.

Voltage

Symbol	Type
5	24 VDC
6	12 VDC

Electrical entry

Symbol	Specifications
G	Grommet
M	Plug connector, with lead wire (With light/surge voltage suppressor)
MO	Plug connector, without lead wire (With light/surge voltage suppressor)

How to Order Manifold Assembly

Specify the part numbers for valves and options together beneath the manifold base part number.

<Example>
Connector kit
SS0755-07C4C ·· 1 set–Manifold base part no.
∗ **S0715-5G ····· 3 sets–Valve part no. (Stations 1 to 3)**
∗ **S0725-5G ····· 2 sets–Valve part no. (Stations 4 to 5)**
∗ **S07A5-5G ····· 2 sets–Valve part no. (Stations 6 to 7)**

Prefix the asterisk to the part numbers of the solenoid valve etc.

Write sequentially from the 1st station on the D side. When part numbers written collectively are complicated, specify on the manifold specification sheet.

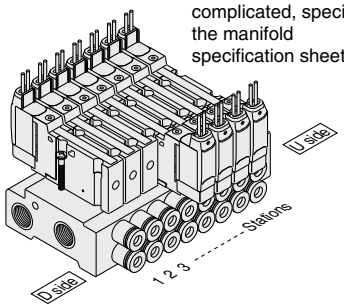

Dimensions

SS0755-☐ M5 C☐ N☐

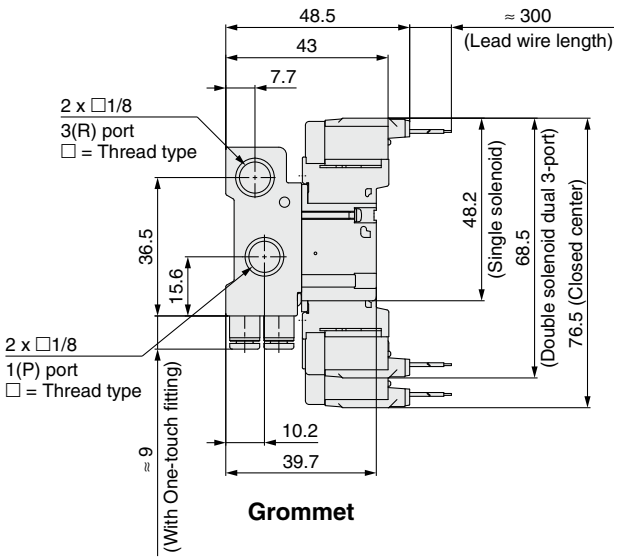

Grommet

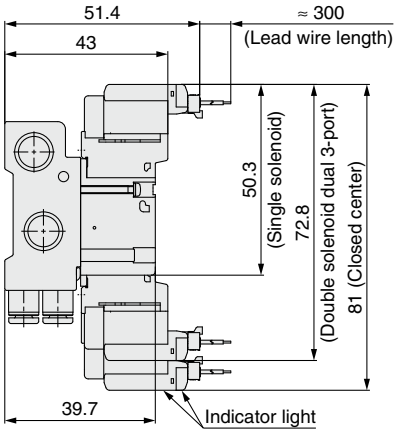

With plug connector/light

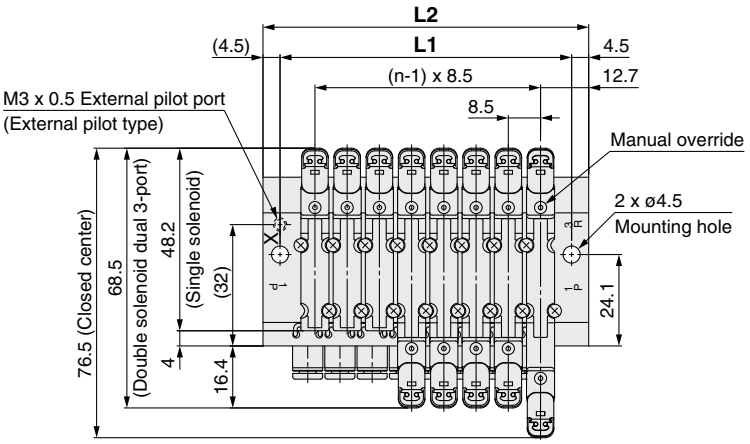

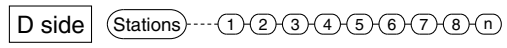

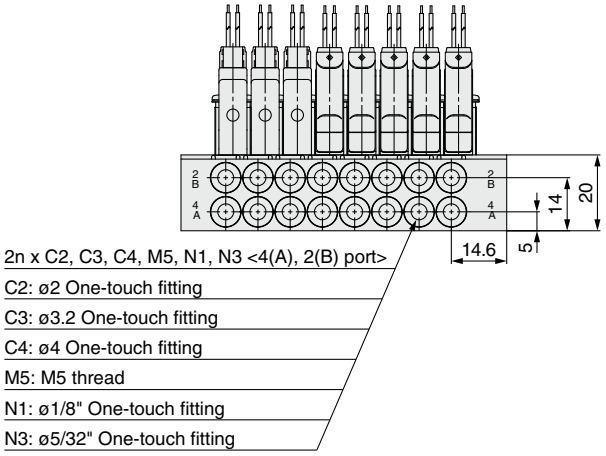

Dimensions

Formula L1 = 8.5n + 8.9, L2 = 8.5n + 17.9 n: Station (Maximum 20 stations)

L \ n	2	3	4	5	6	7	8	9	10	11	12	13	14	15	16	17	18	19	20
L1	25.9	34.4	42.9	51.4	59.9	68.4	76.9	85.4	93.9	102.4	110.9	119.4	127.9	136.4	144.9	153.4	161.9	170.4	178.9
L2	34.9	43.4	51.9	60.4	68.9	77.4	85.9	94.4	102.9	111.4	119.9	128.4	136.9	145.4	153.9	162.4	170.9	179.4	187.9

Dimensions

SS0755-☐ M3 V☐

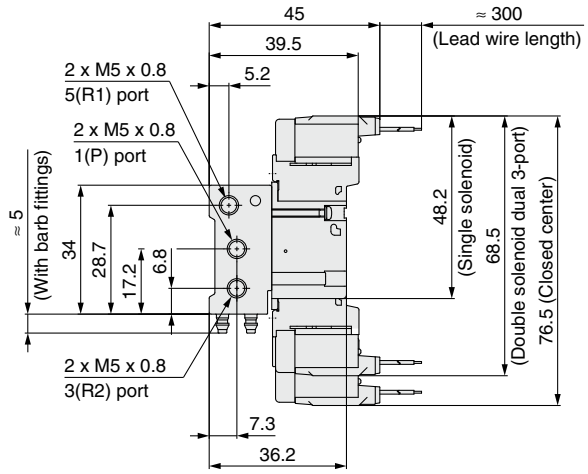

Grommet

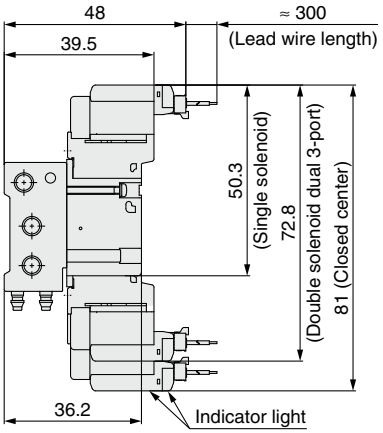

With plug connector/light

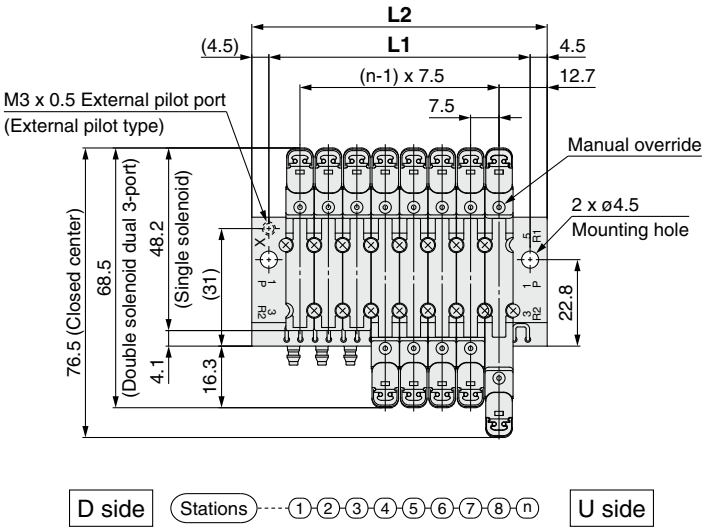

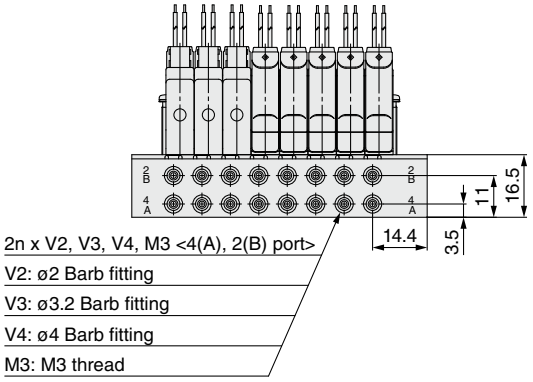

Dimensions

Formula L1 = 7.5n + 8.9, L2 = 7.5n + 17.9 n: Station (Maximum 20 stations)

L \ n	2	3	4	5	6	7	8	9	10	11	12	13	14	15	16	17	18	19	20
L1	23.9	31.4	38.9	46.4	53.9	61.4	68.9	76.4	83.9	91.4	98.9	106.4	113.9	121.4	128.9	136.4	143.9	151.4	158.9
L2	32.9	40.4	47.9	55.4	62.9	70.4	77.9	85.4	92.9	100.4	107.9	115.4	122.9	130.4	137.9	145.4	152.9	160.4	167.9

Plug Lead Type

Base Mounted Manifold Bar Base

Serial Transmission: S Kit

EX510 Gateway Type
Serial Transmission System

Series S0700

CE RoHS

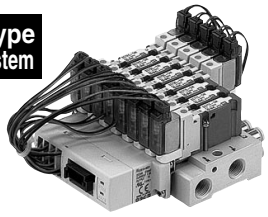

How to Order Manifold

SS0755-SA □ 08 C4 □ - □

S Kit
EX510 serial wiring

Note) For SI Unit part number, refer to the **WEB catalog** or the Best Pneumatics No. 1.

SI Unit output polarity

Nil	Positive common
N	Negative common

Stations

Symbol	Stations
02	2 stations
⋮	⋮
16	16 stations

Note) The maximum number of stations is determined by the total number of solenoids. For mixed single and double wirings, enter "-K" to the order code options.

Standard station	Max. number of stations for special wiring specifications	Max. number of solenoids
1 to 8 stations	16 stations	16

Type of actuation	Single	Double, Dual 3-port
Number of solenoids	1	2

For details of the EX510 Gateway Type Serial Transmission System, refer to the **WEB catalog** or the Best Pneumatics No. 1, and the Operation Manual. Please download the Operation Manual via our website, http://www.smcworld.com

Option

Symbol	Type
Nil	None
K Note 2)	Special wiring specifications (Except double wiring)
R Note 3)	External pilot

Note 1) When multiple options are specified, indicate them alphabetically. Example) -KR
Note 2) Indicate the wiring specifications for mixed single and double wirings.
Note 3) For details, refer to page 20.
∗ **For manifold optional parts, refer to pages 20 to 22.**

P, R port thread type

Symbol	Manifold pitch 8.5
Nil	Rc
F	G
N	NPT
T	NPTF

Cylinder port size

Symbol	Port size	
M5	M5 thread	Metric
C2	With ø2 One-touch fitting	
C3	With ø3.2 One-touch fitting	
C4	With ø4 One-touch fitting	
CM	Mixed sizes and with port plug Note)	
N1	With ø1/8" One-touch fitting	Inch
N3	With ø5/32" One-touch fitting	
NM	Mixed sizes and with port plug Note)	

Note) Specify "Mixed sizes and with port plug" on the manifold specification sheet.

How to Order Valves

S07 1 5 □ - 5 MO

Type of actuation

Symbol	Specifications
1	2-position single
2	2-position double
3	3-position closed center
A	4-position dual 3-port (N.C. + N.C.) [Exhaust center]
B	4-position dual 3-port (N.O. + N.O.) [Pressure center]
C	4-position dual 3-port (N.C. + N.O.)

Note) For symbol, refer to page 6.

Base Mounted Manifold

Function

Symbol	Type
Nil	Standard
R	External pilot Note)

Note) Not compatible with dual 3-port valves.

Voltage: 24 VDC

Electrical entry
M-type plug connector, without lead wire (With light/surge voltage suppressor)

How to Order Manifold Assembly

Specify the part numbers for valves and options together beneath the manifold base part number.

<Example>
Serial transmission kit
SS0755-SA08C4·····1 set–Manifold base part no.
∗ S0715-5MO ·····3 sets–Valve part no. (Stations 1 to 3)
∗ S0725-5MO ·····3 sets–Valve part no. (Stations 4 to 6)
∗ S07A5-5MO·····2 sets–Valve part no. (Stations 7 to 8)

Prefix the asterisk to the part numbers of the solenoid valve etc.

Write sequentially from the 1st station on the D side. When part numbers written collectively are complicated, specify on the manifold specification sheet. The connector assembly lead wire length used for EX510 manifold varies depending on the number of stations. Therefore, solenoid valves (including a blanking plate) and connector assembly are assembled when shipped as a standard specification. Specify the mounting solenoid valve when ordering.

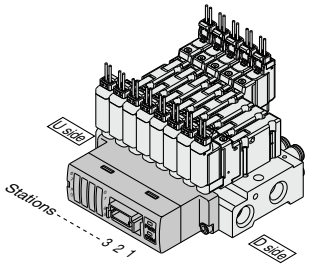

Dimensions

SS0755-SA□ M5 C□ N□

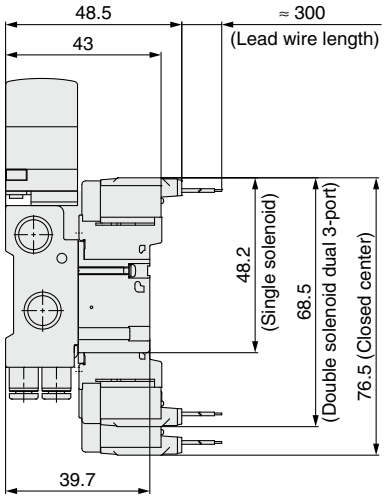

Grommet

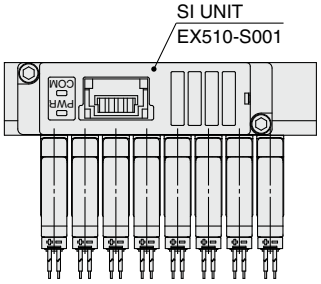

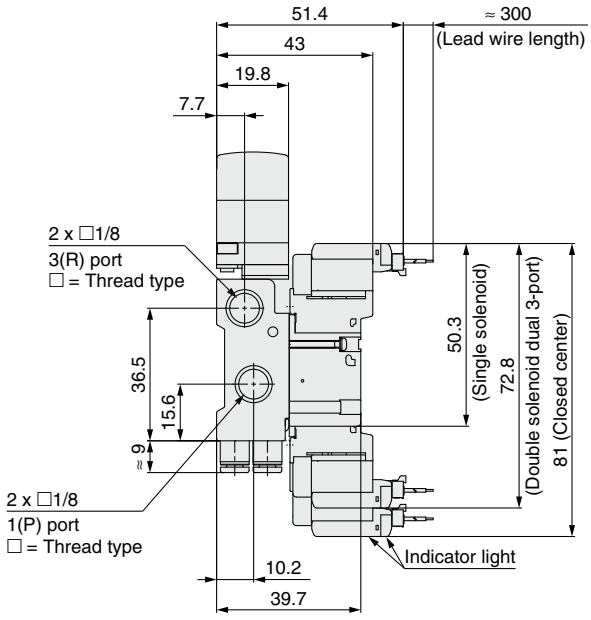

With plug connector/light

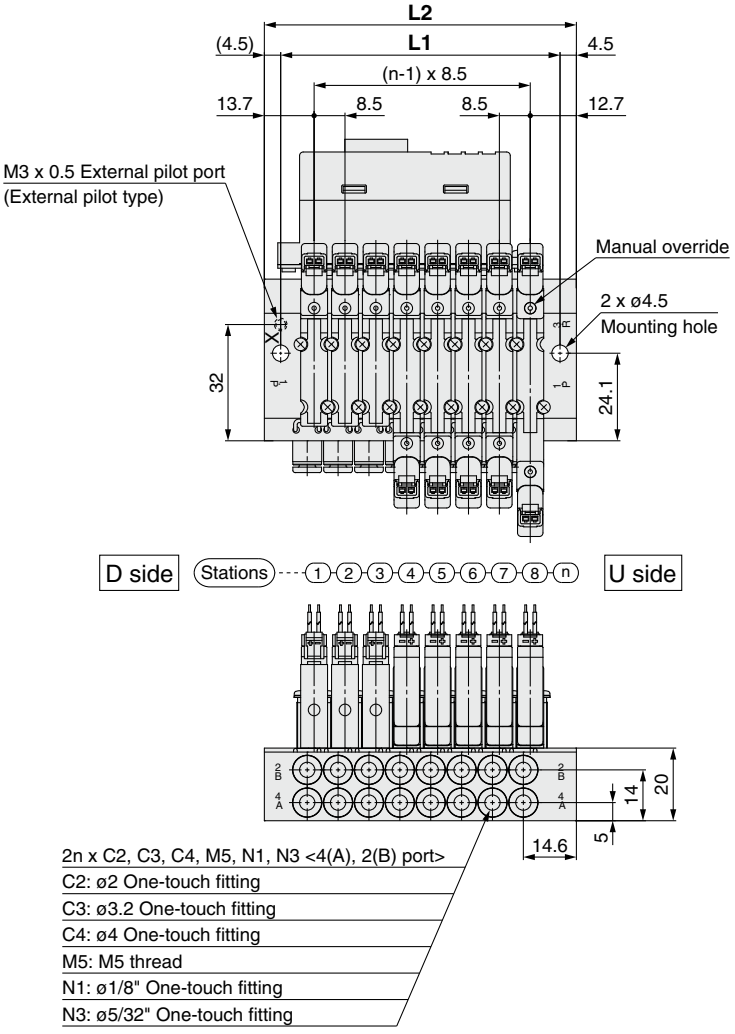

Dimensions

n: Station (Maximum 16 stations)

L \ n	2	3	4	5	6	7	8	9	10	11	12	13	14	15	16
L1	68.4	68.4	68.4	68.4	68.4	68.4	76.9	85.4	93.9	102.4	110.9	119.4	127.9	136.4	144.9
L2	77.4	77.4	77.4	77.4	77.4	77.4	85.9	94.4	102.9	111.4	119.9	128.4	136.9	145.4	153.9

Note) The L dimension of 2 to 7 stations is the same. Valves are numbered from the D side according up to the number of stations.

Series S0700
Options

Body Ported — Direct EXH outlet with built-in silencer [S]

Since a silencer is built into the exhaust port of the valve, it has a high silencing effect. (Noise reduction: 20 dB(A))

• How to Order Valves (Example)

S0716 S -5G-C4

• Built-in silencer

Note) A large quantity of drainage generated in the air source results in exhaust of air together with drainage.

• For maintenance, refer to page 27.

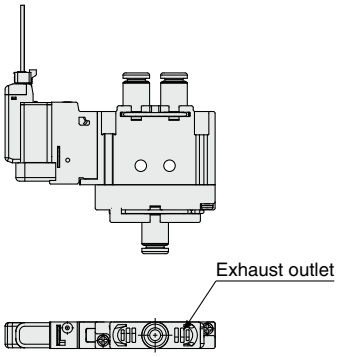

Body Ported / Base Mounted — Blanking plate assembly

SS0700-10A-2/SS0700-10A-5

It is used by attaching on the manifold block for being prepared for removing a valve for maintenance reasons or planning to mount a spare valve etc.

Applicable manifold		Part no.	Weight
Body ported	SS0752	SS0700-10A-2	28 g
Base mounted	SS0755	SS0700-10A-5	21 g

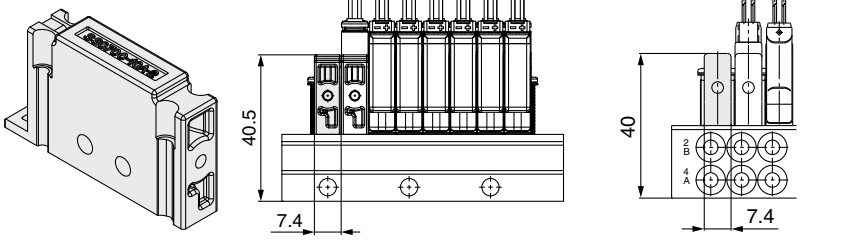

Body Ported (SS0752) **Base Mounted (SS0755)**

Body Ported / Base Mounted — External pilot [-R]

This can be used when the air pressure is lower than the minimum operating pressure (0.2 MPa) of the solenoid valves or used for vacuum specification. Add "-R" to the part numbers of manifolds and valves to indicate the external pilot specification.

An M3 port will be installed on the top side of the manifold's SUP/EXH block.

• How to Order Valves (Example)

S0712 R -5G-C4

• External pilot

• How to Order Manifold (Example)

∗ Indicate "-R" for an option.

SS0752-08C-R

• External pilot

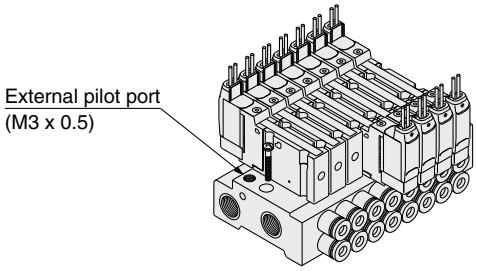

Note 1) The dual 3-port valve is not available.

Note 2) When the internal pilot type and external pilot type of valves are mixed up on the manifold, order the manifold suitable for the specification of the external pilot valve.

Note 3) Valves with the external pilot have a pilot EXH with individual exhaust specification and EXH can be pressurized. However, the pressure supplied from EXH should be 0.4 MPa or lower.

Base Mounted — Individual SUP spacer

SS0700-P-5-M5

• Port size

M5	M5 thread

Mounted on the manifold block to make an independent supply port when each solenoid valve uses different operating pressure.

Weight: 7 g

∗ Compatible with 8.5 mm pitch manifold only.

∗ Cannot be mounted on the body ported manifold (SS0752).

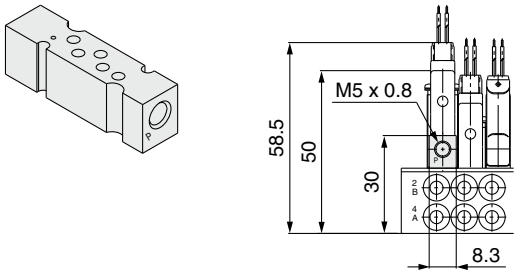

Base Mounted

Individual EXH spacer

SS0700-R-5-M5

Port size

M5	M5 thread

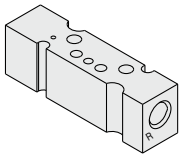

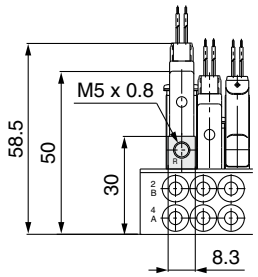

Mounted on the manifold block to make an independent exhaust port when the exhaust from one valve affects valves on other stations in the air circuit.

Weight: 7 g

* Compatible with 8.5 mm pitch manifold only.
* Cannot be mounted on the body ported manifold (SS0752).

Base Mounted

Port plug

VVQ0000-CP

The plug is used to block the cylinder port when using a 5-port valve as a 3-port valve.

* When ordering a plug incorporated with a manifold, indicate “CM” for the port size in the manifold part number as well as the station number, mounting positions of cylinder port A/B, on the manifold specification sheet.

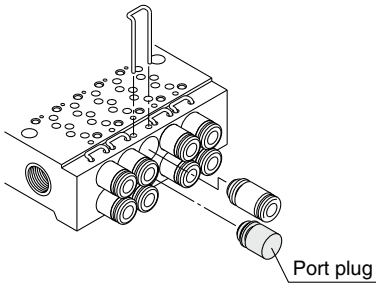

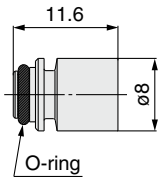

Body Ported Base Mounted

Blanking plug (For One-touch fittings)

KJP-02

KQ2P-23 / 04

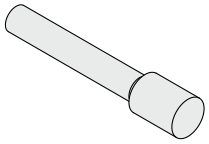

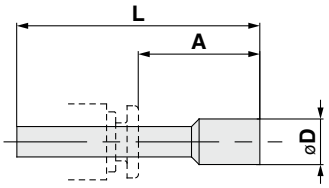

Dimensions [mm]

Applicable fitting size ø**d**	Model	**A**	**L**	**D**	Weight [g]
2	**KJP-02**	8.2	17	3	0.1
3.2	**KQ2P-23**	16	31.5	5	1
4	**KQ2P-04**	16	32	6	1

Body Ported Base Mounted

Silencer (For manifold EXH port)

Silencer is installed in the EXH port.

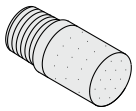

AN110-01 (BC sintered body)

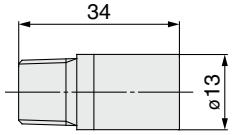

AN10-01 (Resin)

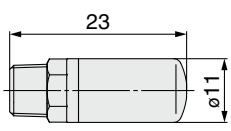

Body Ported | Base Mounted

Double check block (Separated)

VQ1000-FPG-□□

It is used on the outlet side piping to keep the cylinder in the intermediate position for long periods of time. Combining the double check block with a built-in pilot type double check valve and a 2-position single/double solenoid valve will permit this block to be used for preventing the dropping at the cylinder stroke end when the SUP residual pressure is released.

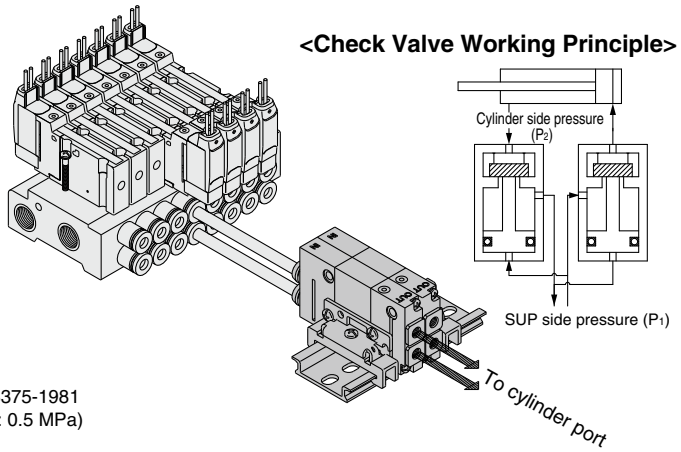

<Check Valve Working Principle>

Specifications

Max. operating pressure	0.8 MPa
Min. operating pressure	0.15 MPa
Ambient and fluid temperature	–5 to 50°C
Flow-rate characteristics: C	0.60 dm³/(s·bar)
Max. operating frequency	180 c.p.m

Note) Based on JIS B 8375-1981
(Supply pressure: 0.5 MPa)

Dimensions

Single Unit

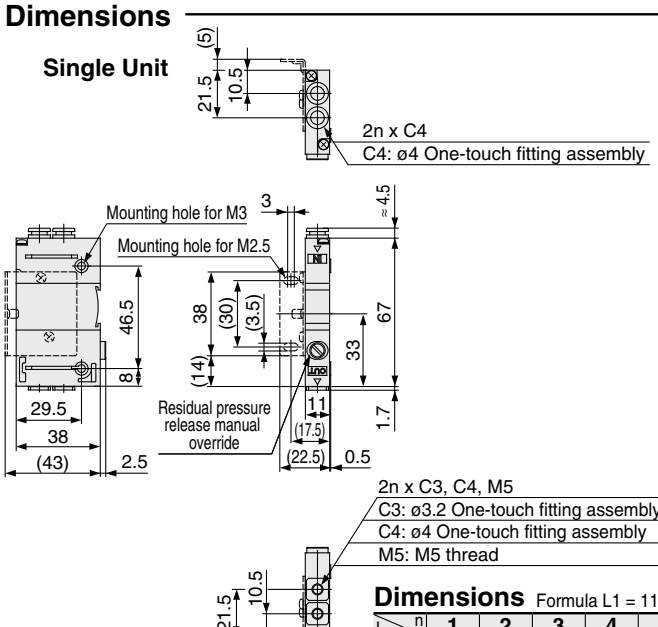

Manifold

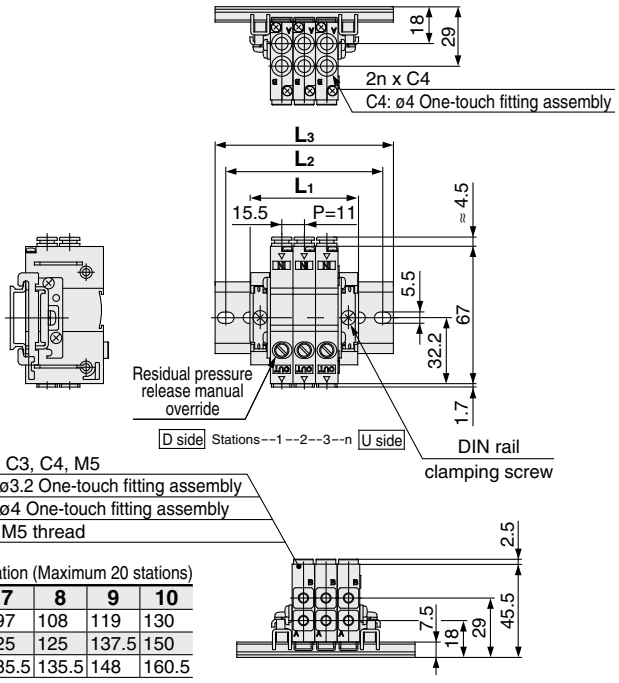

Dimensions Formula L1 = 11n + 20 n: Station (Maximum 20 stations)

L \ n	1	2	3	4	5	6	7	8	9	10
L1	31	42	53	64	75	86	97	108	119	130
L2	50	62.5	75	87.5	100	112.5	125	125	137.5	150
L3	60.5	73	85.5	98	110.5	123	135.5	135.5	148	160.5

L \ n	11	12	13	14	15	16	17	18	19	20
L1	141	152	163	174	185	196	207	218	229	240
L2	162.5	175	187.5	187.5	200	212.5	225	237.5	250	250
L3	173	185.5	198	198	210.5	223	235.5	248	260.5	260.5

How to Order

Single unit, double check block

VQ1000 – FPG – C4 M5 – F

IN side port size

C4	ø4 One-touch fitting

OUT side port size

M5	M5 thread
C3	ø3.2 One-touch fitting
C4	ø4 One-touch fitting

Option

Nil	None
D	DIN rail mounting (For manifold)
F	With bracket
N	With name plate

Note) When multiple symbols are specified, indicate them alphabetically.
Example) -DN

Manifold (DIN rail mounting)

VVQ1000 – FPG – 06

When ordering a double check block, order the DIN rail mounting [-D].

Stations

01	1 station
⋮	⋮
16	16 stations

<Example>
VVQ1000-FPG-06···6-station manifold
* VQ1000-FPG-C4M5-D: 6 sets } Double check block

⚠Caution

- Air leakage from the pipe between the valve and cylinder or from the fittings will prevent the cylinder from stopping for long periods of time. Check for the leakage using neutral household detergent, such as dish washing soap. Also, check the cylinder's tube gasket, piston seal and rod seal for air leakage.
- Since One-touch fittings allow slight air leakage, screw piping (with M5 thread) is recommended when stopping the cylinder in the middle for long periods of time.
- M5 fitting assembly is attached, not incorporated into the double check block. After screwing in the M5 fittings, mount the assembly on the double check block. {Tightening torque: 0.8 to 1.2 N·m}
- If the exhaust of the double check block is restricted too much, the cylinder may not operate properly and may not stop intermediately.

<Example>
2-position

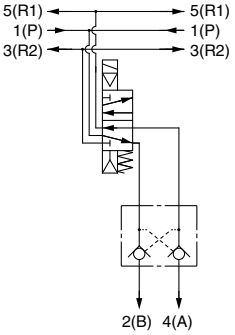

Bracket Assembly

Part no.	Tightening torque
VQ1000-FPG-FB	0.22 to 0.25 N·m

Note) This torque is used to mount the bracket on the double check block.

Construction

Body Ported Construction

2-Position Single

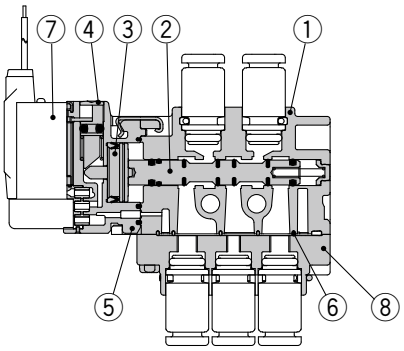

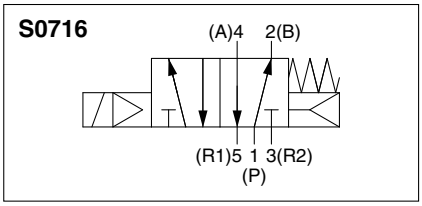

2-Position Double

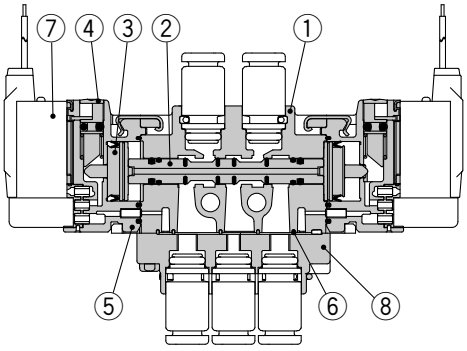

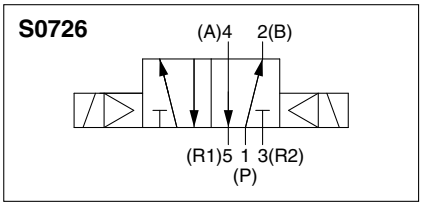

3-Position Closed Center

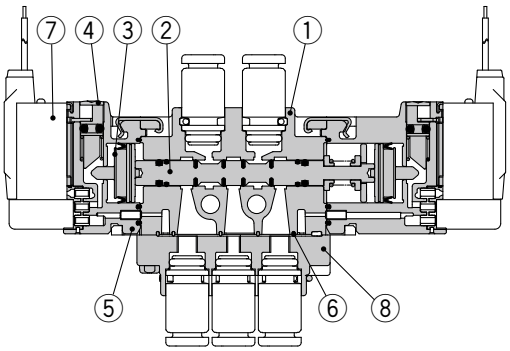

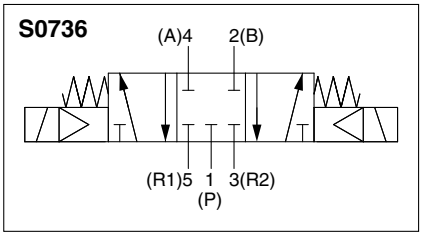

4-Position Dual 3-Port Valve

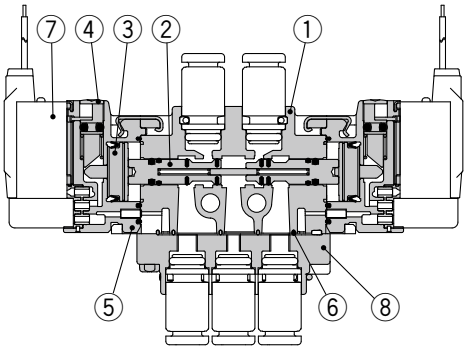

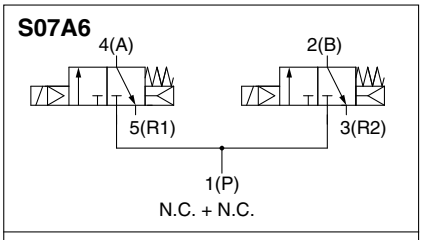

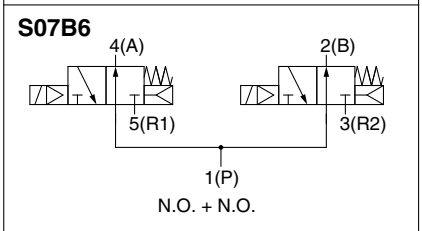

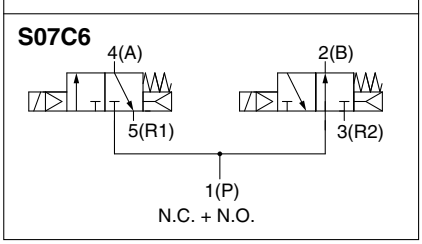

Component Parts

No.	Description	Material
1	**Body**	Zinc die-casted
2	**Spool**	Aluminum
3	**Piston**	Resin
4	**Manual override**	Resin
5	**Adapter plate**	Resin
6	**Interface gasket**	HNBR
7	**Pilot valve assembly**	Refer to page 25.
8	**PR plate**	Resin Note)

Note) The external pilot is made of aluminum.

Base Mounted

Construction

2-Position Single

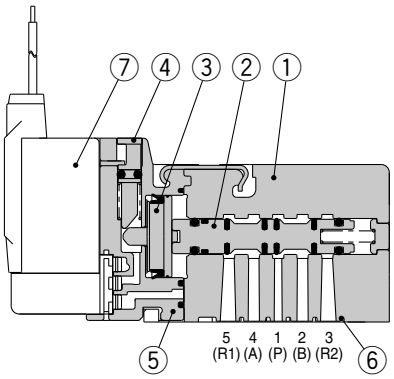

S0715

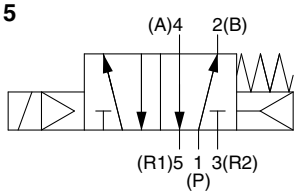

2-Position Double

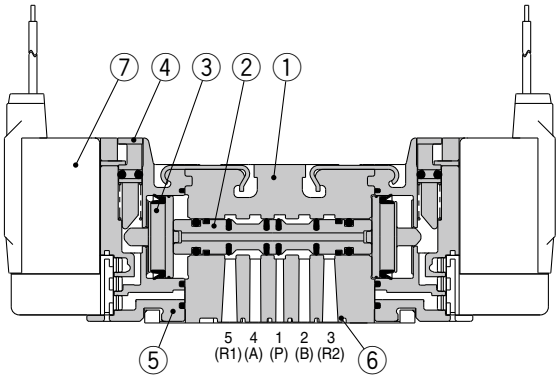

S0725

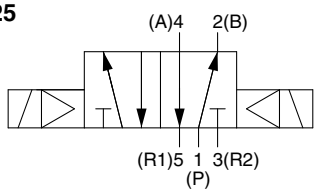

3-Position Closed Center

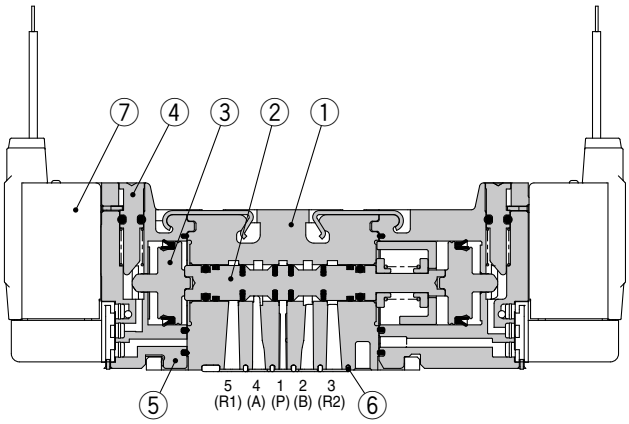

S0735

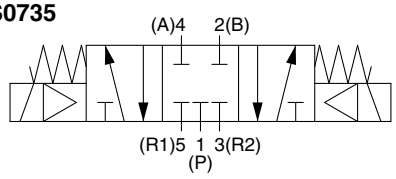

4-Position Dual 3-Port Valve

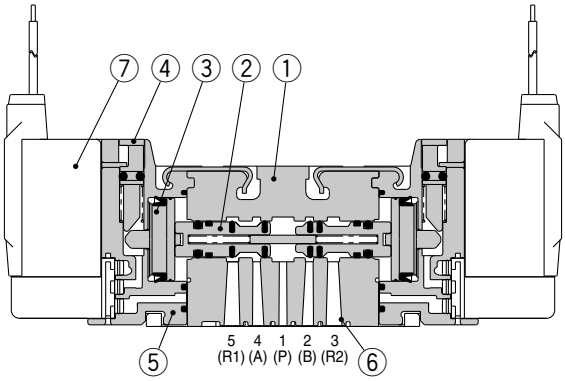

S07A5

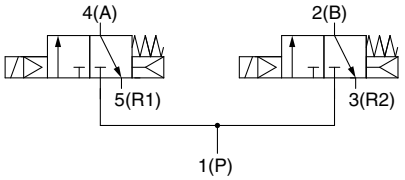

N.C. + N.C.

S07B5

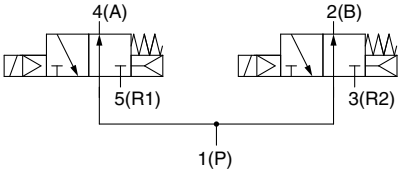

N.O. + N.O.

S07C5

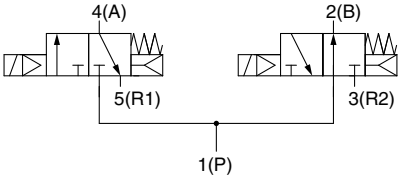

N.C. + N.O.

Component Parts

No.	Description	Material
1	**Body**	Zinc die-casted
2	**Spool**	Aluminum
3	**Piston**	Resin
4	**Manual override**	Resin
5	**Adapter plate**	Resin
6	**Interface gasket**	HNBR
7	**Pilot valve assembly**	Refer to page 25.

Series S0700
Replacement Parts

<One-touch Fitting Assembly (For Cylinder Port)>

Body Ported | Base Mounted

Applicable manifold		Port size		Part no.
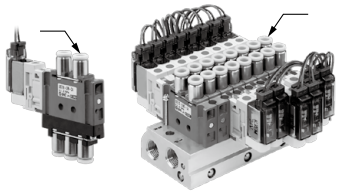	Body Ported S07□6 SS0752	ø2 One-touch fitting		KJH02-C1
		ø4 One-touch fitting		KJH04-C1
		ø1/8" One-touch fitting		KJH01-C1
		ø5/32" One-touch fitting		KJH03-C1
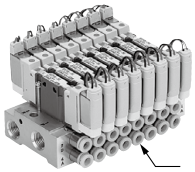	Base Mounted SS0755	8.5 mm pitch	ø2 One-touch fitting	VVQ0000-50A-C2
			ø3.2 One-touch fitting	VVQ0000-50A-C3
			ø4 One-touch fitting	VVQ0000-50A-C4
			ø1/8" One-touch fitting	VVQ0000-50A-N1
			ø5/32" One-touch fitting	VVQ0000-50A-N3
		7.5 mm pitch	ø2 Barb fitting	SS070-50A-20
			ø3.2 Barb fitting	SS070-50A-32
			ø4 Barb fitting	SS070-50A-40

Note) Purchasing order is available in units of 10 pieces.

<Plug Connector Assembly>

Body Ported | Base Mounted

S070 − 14A − □

Lead wire length

Symbol	Length
Nil	150 mm
3	300 mm
6	600 mm
10	1000 mm

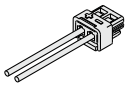

Note) Standard wire length of valve with plug connector is 300 mm. When ordering a lead wire length of 600 mm or longer, list the part numbers for the valve without connector and the connector assembly.

<Pilot Valve Assembly>

Body Ported | Base Mounted

S070P − 5 B G −1

Voltage

Symbol	Type
5	24 VDC
6	12 VDC

Accessory

Symbol	Specifications
Nil	None
−1	Stopper plate is included.

Electrical entry

Symbol	Specifications
G	Grommet
C	Plug connector, with lead wire (With light/surge voltage suppressor)
CO	Plug connector, without lead wire (With light/surge voltage suppressor)

Note) For pilot valve assembly replacement, refer to “Specific Product Precautions” on page 29.

<Gasket, Screw Assembly>

Body Ported | Base Mounted

Body ported	For internal pilot	**S0700-GS-2**
	For external pilot	**S0700-GS-2R**
Base mounted		**S0700-GS-5**

Note) Above part number consists of 10 units. Each unit has one gasket and two screws.

<Sub-plate>

Base Mounted

Part no.	Type
S0700-S-M5	For internal pilot
S0700-S-M5-R	For external pilot

<SI Unit (EX510 series)>

Base Mounted

EX510 − S 0 01

Output specifications

0	NPN output (Positive common)
1	PNP output (Negative common)

<Silencer Element>

Body Ported

Element part number: **S0700-82A-1**
1 set includes 10 pieces. (for 5 valves)

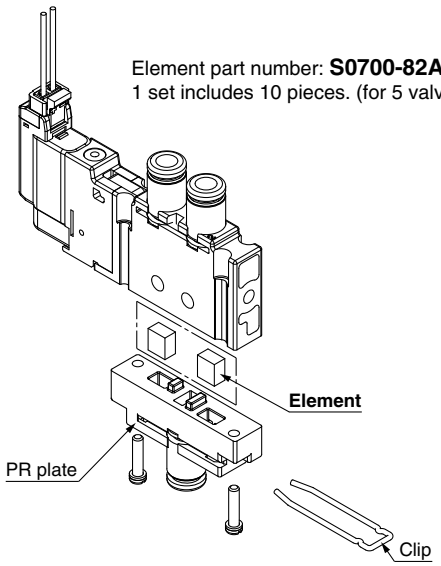

Specific Product Precautions 1

Be sure to read this before handling. Refer to the back cover for Safety Instructions. For 3/4/5 Port Solenoid Valve Precautions, refer to "Handling Precautions for SMC Products" and the Operation Manual on SMC website, http://www.smcworld.com

Manual Override

⚠ Warning

The manual override is used for switching the main valve.

Push type (Tool required)

Push down on the manual override button with a tool such as a small screwdriver until it stops.

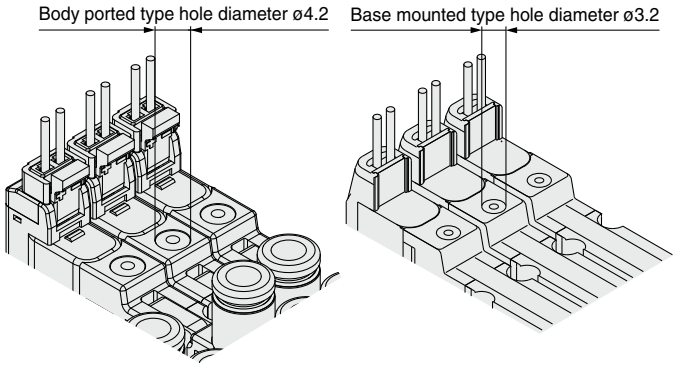

How to Attach/Detach Plug Connector

To attach a connector, hold the lever and connector unit between your fingers and insert straight onto the pins of the solenoid valve so that the lever's pawl is pushed into the groove and locks.

To detach a connector, remove the pawl from the groove by pushing the lever downward with your thumb, and pull the connector straight out.

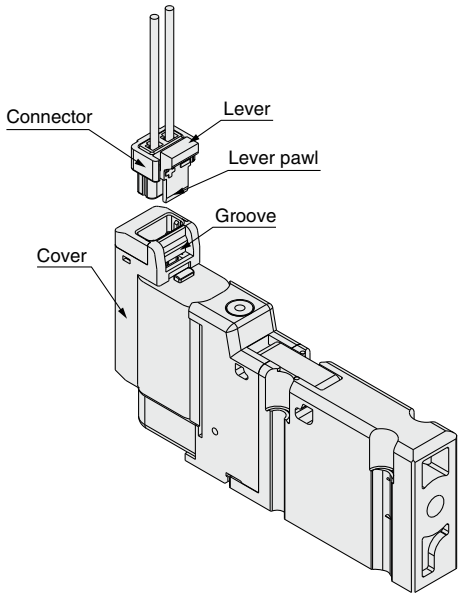

Note) In order not to damage the connector and cover, do not pull the lead wire excessively (with a force of 10 N or more).

How to Mount Valve

⚠ Caution

Tighten the bolts firmly to stop the gasket from coming away from the valve using the appropriate torque as shown on the following table.

Proper tightening torque [N·m]
0.17 to 0.23

Body Ported

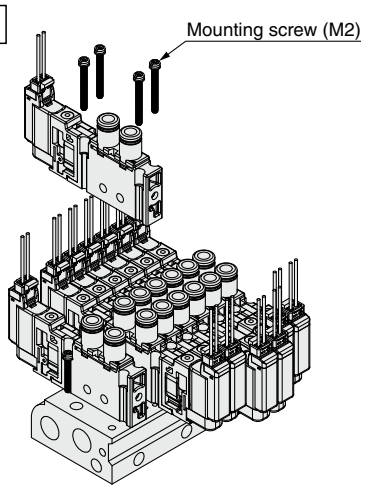

When mounting a single body ported valve on the wall directly, use the following tightening torque.

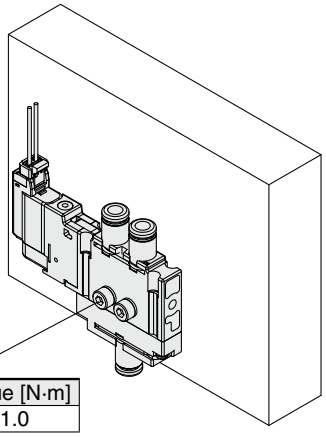

Proper tightening torque [N·m]
M3 thread 0.5 to 1.0

Base Mounted

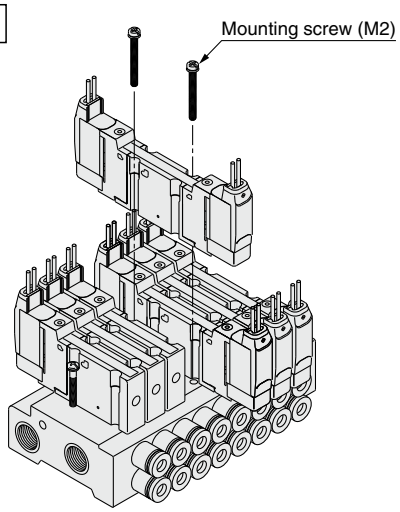

Series S0700
Specific Product Precautions 2

Be sure to read this before handling. Refer to the back cover for Safety Instructions. For 3/4/5 Port Solenoid Valve Precautions, refer to "Handling Precautions for SMC Products" and the Operation Manual on SMC website, http://www.smcworld.com

How to Replace One-touch Fittings

⚠ Warning

The cylinder port fittings are a cassette for easy replacement.

Base Mounted

The fittings are blocked by a clip inserted from the top of the valve. Remove the clip with a tool such as a flat blade screwdriver to remove fittings. For replacement, insert the fitting assembly until it strikes against the inside wall and then re-insert the clip to the specified position.

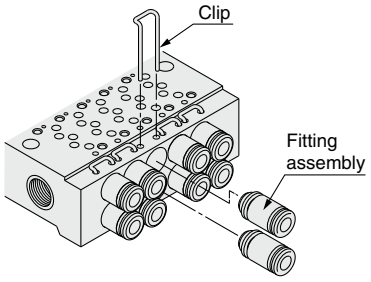

	Applicable tube O.D.	Fitting assembly part no.
8.5 mm pitch (One-touch fitting)	Applicable tube ø2	VVQ0000-50A-C2
	Applicable tube ø3.2	VVQ0000-50A-C3
	Applicable tube ø4	VVQ0000-50A-C4
	Applicable tube ø1/8"	VVQ0000-50A-N1
	Applicable tube ø5/32"	VVQ0000-50A-N3
7.5 mm pitch (Barb fitting)	Barb fitting ø2	SS070-50A-20
	Barb fitting ø3.2	SS070-50A-32
	Barb fitting ø4	SS070-50A-40

∗ Part number is for one fitting assembly. Please order it in units of 10 pieces.

Body Ported

The fittings are blocked by a clip. After removing the corresponding valve and take out the clip with a tool such as watchmakers' flat blade screwdriver, then replace the fittings. For mounting, insert the fitting until it strikes against the inside wall and then insert the clip to the specified position.

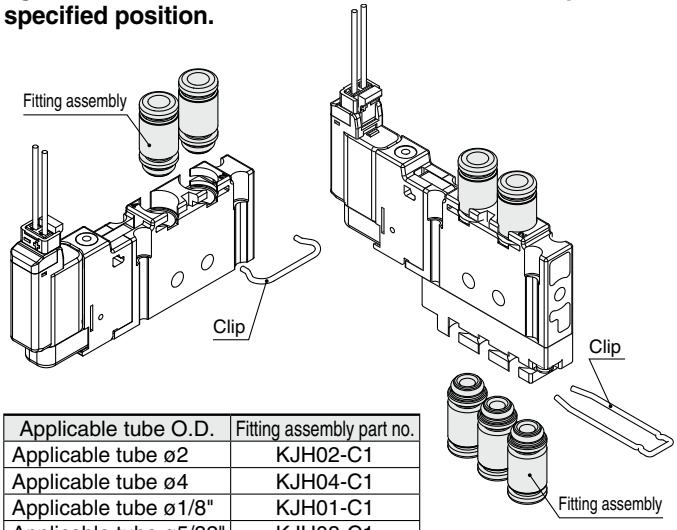

Applicable tube O.D.	Fitting assembly part no.
Applicable tube ø2	KJH02-C1
Applicable tube ø4	KJH04-C1
Applicable tube ø1/8"	KJH01-C1
Applicable tube ø5/32"	KJH03-C1

∗ Part number is for one fitting assembly. Please order it in units of 10 pieces.

How to Replace Silencers

A single body ported valve has a built-in silencer.
A dirty and clogged silencer may reduce cylinder speed or cause a malfunction. Replace the silencer periodically.

To replace the silencer, remove the PR plate after removing the clip, and then remove the old element with a tool such as a flat blade screwdriver.

Element part number: **S0700-82A-1**
1 set includes 10 pieces. (for 5 valves)

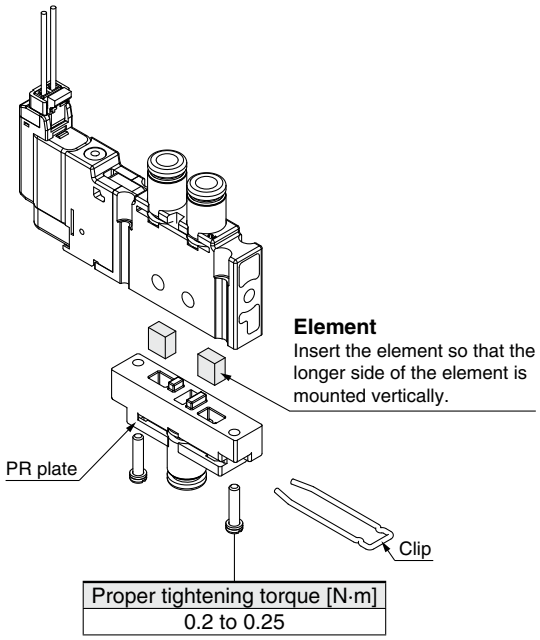

Proper tightening torque [N·m]
0.2 to 0.25

Other Tube Brands

⚠ Caution

When using other than SMC brand tube, confirm that the following specifications are satisfied with respect to the tube outside diameter tolerance.

1) Nylon tube within ±0.1 mm
2) Soft nylon tube within ±0.1 mm
3) Polyurethane tube within +0.15 mm, within –0.2 mm

Do not use tube which do not meet these outside diameter tolerances. It may not be possible to connect them, or they may cause other trouble, such as air leakage or the tube pulling out after connection.

Series S0700
Specific Product Precautions 3

Be sure to read this before handling. Refer to the back cover for Safety Instructions. For 3/4/5 Port Solenoid Valve Precautions, refer to "Handling Precautions for SMC Products" and the Operation Manual on SMC website, http://www.smcworld.com

One-touch Fittings

Tube attachment/detachment for One-touch fittings

1) Tube attachment

1. Take a tube having no flaws on its periphery and cut it off at a right angle. When cutting the tube, use tube cutters TK-1, 2 or 3. Do not use pinchers, nippers or scissors, etc. If cutting is done with tools other than tube cutters, the tube may be cut diagonally or become flattened, etc., making a secure installation impossible. Allow some extra length in the tube.
2. The outside diameter of the polyurethane tube swells when internal pressure is applied to it. Therefore, it may be possible that the tube cannot be re-inserted into the One-touch fitting. Check the tube outside diameter, and when the accuracy of the outside diameter is +0.07 mm or larger for ø2, +0.15 mm or larger for other sizes, insert into the One-touch fitting again, without cutting the tube to use it. When the tube is re-inserted into the One-touch fitting, confirm that the tube goes through the release button smoothly.
3. Grasp the tube, slowly push it straight (0 to 5°) into the One-touch fitting until it comes to a stop.
4. After inserting the tube, pull on it lightly to confirm that it will not come out. If it is not installed securely all the way into the fitting, this can cause problems such as air leakage or the tube pulling out.

2) Tube detachment

1. Push in the release button sufficiently, pushing its collar equally around the circumference.
2. Pull out the tube while holding down the release button so that it does not come out. If the release button is not pressed down sufficiently, there will be increased bite on the tube and it will become more difficult to pull it out.
3. When the removed tube is to be used again, cut off the portion which has been chewed before reusing it. If the chewed portion of the tube is used as is, this can cause trouble such as air leakage or difficulty in removing the tube.

Do not apply unnecessary forces such as twisting, pulling, moment loads, vibration and impact, etc. on fittings or tubing.

A force of 20 N or more applied to the fitting and/or tube can cause damage to the valve and/or fitting, crushing, bursting, or detachment of tubing, or air leakage.

Internal Wiring Specifications

⚠ Caution

Light/surge voltage suppressor

No polarity by adopting non-polar light.

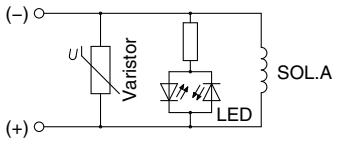

Note) Coil surge voltage generated when OFF is about –60 V. Please contact SMC separately for further suppression of the coil surge voltage.

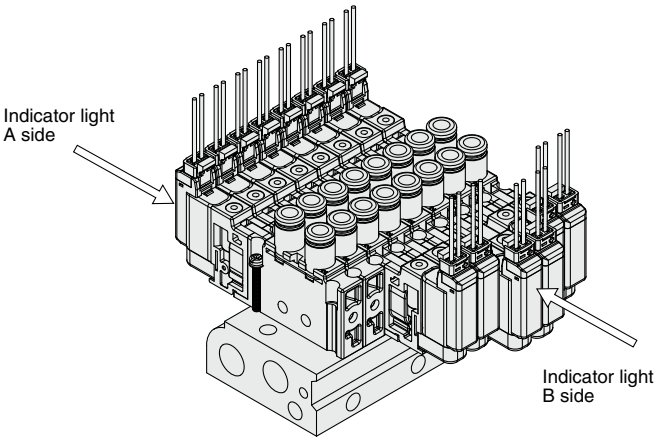

Surge Voltage Intrusion

⚠ Caution

The surge voltage created when the power supply is cut off could apply to the de-energized load equipment through the output circuit. In cases where the energized load equipment has a larger capacity (power consumption) and is connected to the same power supply as the product, the surge voltage could malfunction and/or damage the internal circuit element of the product and the internal device of the output equipment. To avoid this situation, place a diode which can suppress the surge voltage between the COM lines of the load equipment and output equipment.

Series S0700
Specific Product Precautions 4

Be sure to read this before handling. Refer to the back cover for Safety Instructions. For 3/4/5 Port Solenoid Valve Precautions, refer to "Handling Precautions for SMC Products" and the Operation Manual on SMC website, http://www.smcworld.com

How to Replace Pilot Valve

⚠ Caution

Removal

1) Remove the stopper plate from the adapter plate assembly by using a flat blade screwdriver on the concave of the stopper plate.
2) Take off the pilot valve in horizontal direction.

Mounting

1) Mount the pilot valve on the adapter plate assembly.
2) Insert the stopper plate into the adapter plate so that the stopper plate will not protrude from the end of the adapter plate.

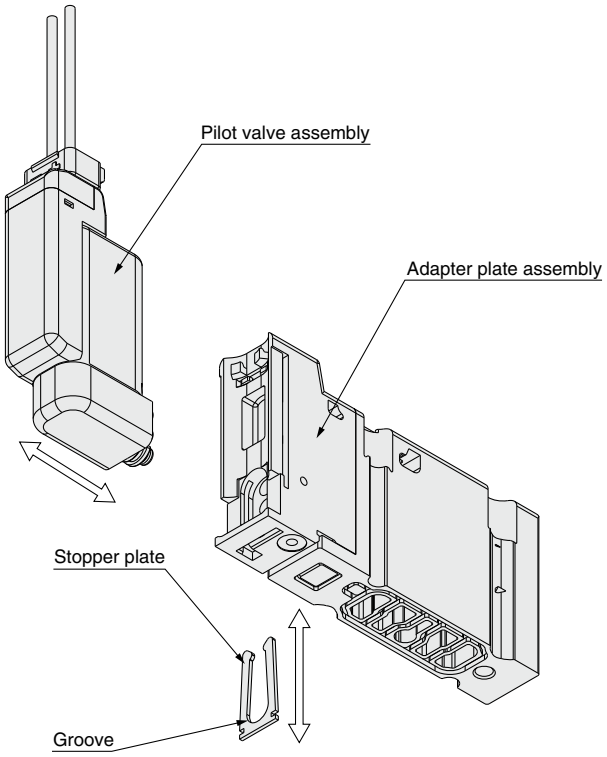

How to Connect Tubing

⚠ Caution

<Base mounted/Barb fittings>

1) Perpendicularly cut the tube to the necessary length by using an SMC tube cutter TK-1, 2, 3 or 6.
2) Firmly insert the tube into the barb fitting. Insufficient insertion of the tube could cause the air leakage and/or disconnection of the tube.
3) When inserting the tube into the barb fitting, move the tube in parallel to the axis of the barb fitting to avoid any excessive side load to the fitting.

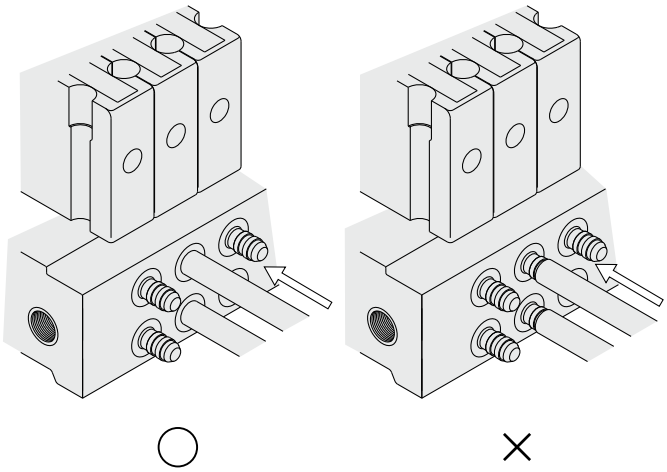

4) Pay attention not to apply any excessive side load to the barb fitting when removing it from the tube. When using a tube cutter or something similar, be careful not to damage or crack the fitting.
5) Do not apply any excessive load such as tensile, compressive or bending force to the tube once connected.

⚠ Safety Instructions

These safety instructions are intended to prevent hazardous situations and/or equipment damage. These instructions indicate the level of potential hazard with the labels of **"Caution," "Warning"** or **"Danger."** They are all important notes for safety and must be followed in addition to International Standards (ISO/IEC)*1), and other safety regulations.

⚠ Caution: **Caution** indicates a hazard with a low level of risk which, if not avoided, could result in minor or moderate injury.

⚠ Warning: **Warning** indicates a hazard with a medium level of risk which, if not avoided, could result in death or serious injury.

⚠ Danger : **Danger** indicates a hazard with a high level of risk which, if not avoided, will result in death or serious injury.

*1) ISO 4414: Pneumatic fluid power – General rules relating to systems.
ISO 4413: Hydraulic fluid power – General rules relating to systems.
IEC 60204-1: Safety of machinery – Electrical equipment of machines.
(Part 1: General requirements)
ISO 10218-1: Manipulating industrial robots – Safety.
etc.

⚠ Warning

1. The compatibility of the product is the responsibility of the person who designs the equipment or decides its specifications.

Since the product specified here is used under various operating conditions, its compatibility with specific equipment must be decided by the person who designs the equipment or decides its specifications based on necessary analysis and test results. The expected performance and safety assurance of the equipment will be the responsibility of the person who has determined its compatibility with the product. This person should also continuously review all specifications of the product referring to its latest catalog information, with a view to giving due consideration to any possibility of equipment failure when configuring the equipment.

2. Only personnel with appropriate training should operate machinery and equipment.

The product specified here may become unsafe if handled incorrectly. The assembly, operation and maintenance of machines or equipment including our products must be performed by an operator who is appropriately trained and experienced.

3. Do not service or attempt to remove product and machinery/ equipment until safety is confirmed.

1. The inspection and maintenance of machinery/equipment should only be performed after measures to prevent falling or runaway of the driven objects have been confirmed.
2. When the product is to be removed, confirm that the safety measures as mentioned above are implemented and the power from any appropriate source is cut, and read and understand the specific product precautions of all relevant products carefully.
3. Before machinery/equipment is restarted, take measures to prevent unexpected operation and malfunction.

4. Contact SMC beforehand and take special consideration of safety measures if the product is to be used in any of the following conditions.

1. Conditions and environments outside of the given specifications, or use outdoors or in a place exposed to direct sunlight.
2. Installation on equipment in conjunction with atomic energy, railways, air navigation, space, shipping, vehicles, military, medical treatment, combustion and recreation, or equipment in contact with food and beverages, emergency stop circuits, clutch and brake circuits in press applications, safety equipment or other applications unsuitable for the standard specifications described in the product catalog.
3. An application which could have negative effects on people, property, or animals requiring special safety analysis.
4. Use in an interlock circuit, which requires the provision of double interlock for possible failure by using a mechanical protective function, and periodical checks to confirm proper operation.

⚠ Caution

1. The product is provided for use in manufacturing industries.

The product herein described is basically provided for peaceful use in manufacturing industries.
If considering using the product in other industries, consult SMC beforehand and exchange specifications or a contract if necessary.
If anything is unclear, contact your nearest sales branch.

Limited warranty and Disclaimer/ Compliance Requirements

The product used is subject to the following "Limited warranty and Disclaimer" and "Compliance Requirements".
Read and accept them before using the product.

Limited warranty and Disclaimer

1. The warranty period of the product is 1 year in service or 1.5 years after the product is delivered, whichever is first.*2)
   Also, the product may have specified durability, running distance or replacement parts. Please consult your nearest sales branch.
2. For any failure or damage reported within the warranty period which is clearly our responsibility, a replacement product or necessary parts will be provided.
   This limited warranty applies only to our product independently, and not to any other damage incurred due to the failure of the product.
3. Prior to using SMC products, please read and understand the warranty terms and disclaimers noted in the specified catalog for the particular products.

*2) **Vacuum pads are excluded from this 1 year warranty.**
A vacuum pad is a consumable part, so it is warranted for a year after it is delivered.
Also, even within the warranty period, the wear of a product due to the use of the vacuum pad or failure due to the deterioration of rubber material are not covered by the limited warranty.

Compliance Requirements

1. The use of SMC products with production equipment for the manufacture of weapons of mass destruction (WMD) or any other weapon is strictly prohibited.
2. The exports of SMC products or technology from one country to another are governed by the relevant security laws and regulations of the countries involved in the transaction. Prior to the shipment of a SMC product to another country, assure that all local rules governing that export are known and followed.

⚠ Caution

SMC products are not intended for use as instruments for legal metrology.

Measurement instruments that SMC manufactures or sells have not been qualified by type approval tests relevant to the metrology (measurement) laws of each country. Therefore, SMC products cannot be used for business or certification ordained by the metrology (measurement) laws of each country.