Air Cylinder

ø6, ø10, ø16

New

RoHS

Double foot **Head flange**

Double-side bossed are added to the mounting types.

4 types ➡ 7 types

New For ø6, 3 types ➡ 6 types

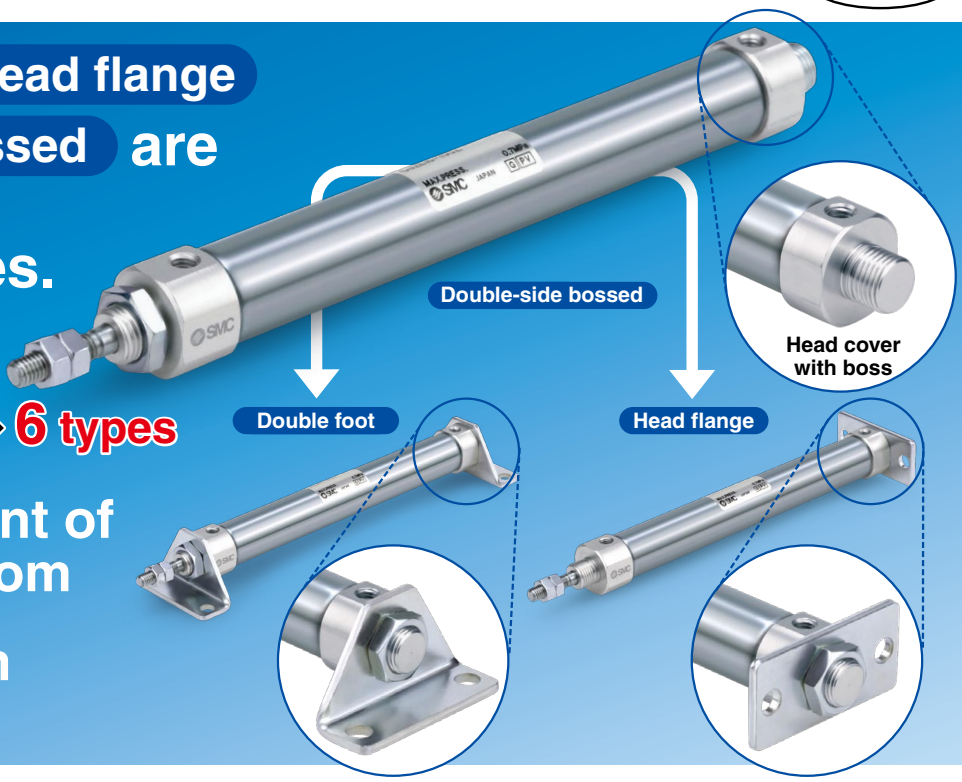

Improved amount of mounting freedom

Head cover with boss is added.

Easy fine adjustment of auto switch position

Fine adjustment of the auto switch position is possible by simply loosening the screw attached to the auto switch.

Transparent switch bracket improves visibility of indicator LED.

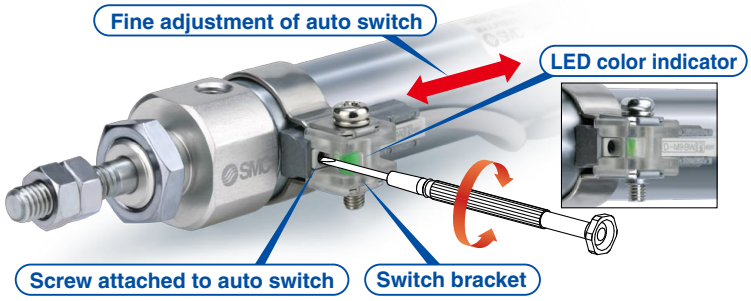

Head cover port location "Perpendicular to axis" is newly added to ø6.

Improved piping flexibility

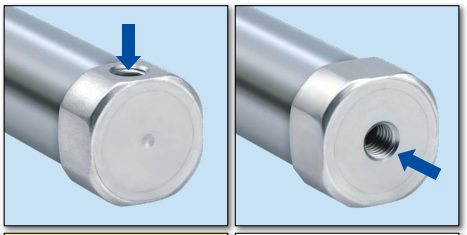

New ø6	●	○
ø10	○	○
ø16	○	○

Series CJ2

SMC

CAT.ES20-226D

Part numbers with rod end bracket and/or pivot bracket available

Not necessary to order a bracket for the applicable cylinder separately

Note) Mounting bracket is shipped together with the product, but not assembled.

Example) CDJ2D16-50Z-NW-M9BW-B

Pivot bracket

Nil	None
N	Pivot bracket is shipped together with the product, but not assembled.

∗: Only for CJ2D (double clevis) type
∗: Except ø6

N: Kit of pivot bracket and double clevis

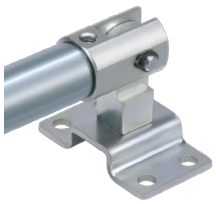

Rod end bracket

Nil	None
V	Single knuckle joint
W	Double knuckle joint
T	Rod end cap (Flat type)
U	Rod end cap (Round type)

∗: ø6: Except V, W

With rod end bracket

V: Single knuckle joint

W: Double knuckle joint

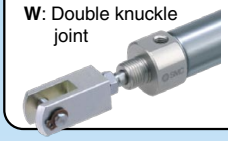

Rod end cap

T: Flat type

U: Round type

Various mounting bracket options

- Suitable mounting brackets can be selected for the installation condition.
- Improved amount of mounting freedom

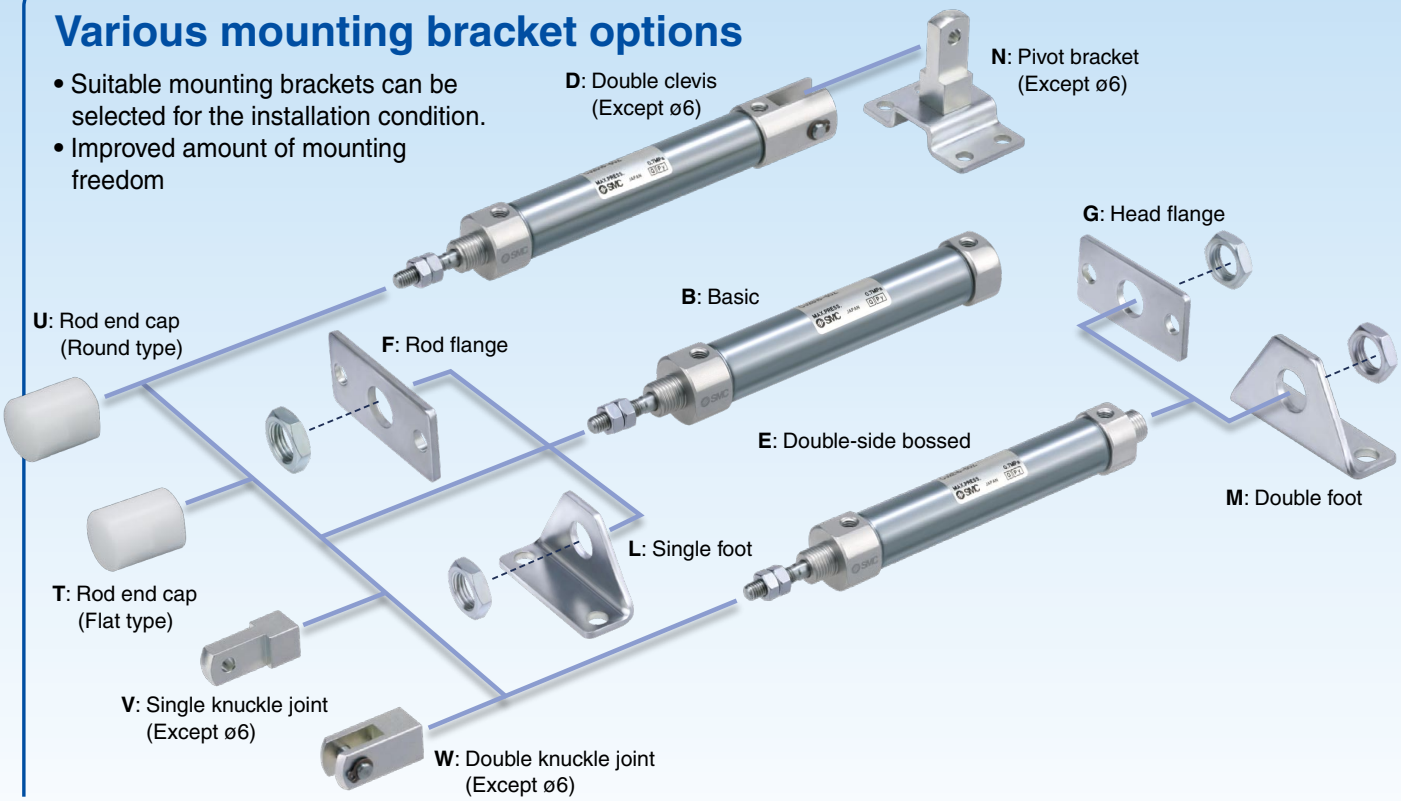

2 mounting types of compact auto switches

- **Band mounting**
- **Rail mounting**

The auto switch mounting type, band or rail can be selected with the model number.

Water resistant compact auto switch now available

- **Solid state auto switch D-M9□A(V)**

Applicable to lead wire perpendicular entry type

Band mounting

Rail mounting
∗: Except ø6

No environmental hazardous substances used

Specifications and dimensions are the same as the current product.

Head cover

4 types of head cover shape are available.

Basic	Double clevis
	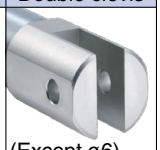 (Except ø6)
Axial piping	**With boss**

Easy fine adjustment of auto switch position

Fine adjustment of the auto switch set position can be performed by loosening the auto switch attached screw without loosening the auto switch mounting band. Operability improved compared with the conventional auto switch set position adjustment, where the complete switch mounting band requires loosening.

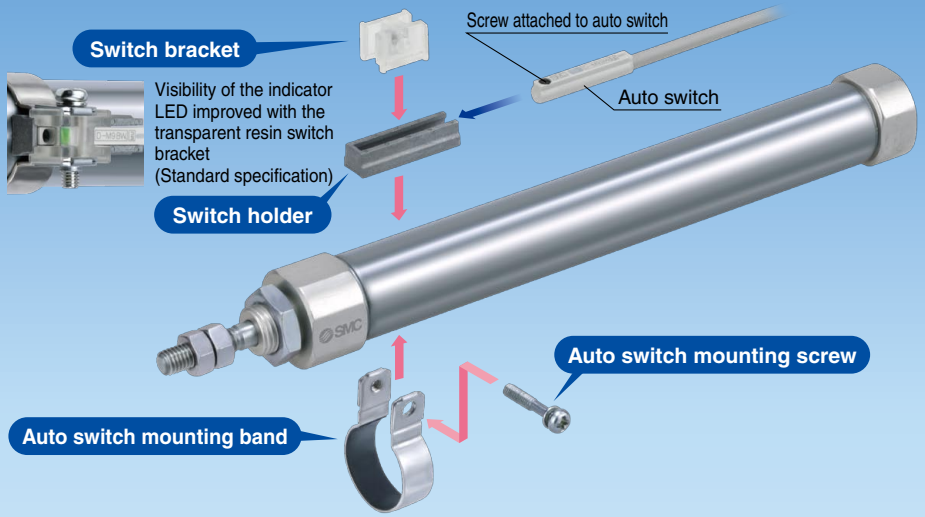

Stroke Variations

Bore size [mm]	Standard stroke									
	15	30	45	60	75	100	125	150	175	200
6	●	●	●	●						
10	●	●	●	●	●	●	●	●		
16	●	●	●	●	●	●	●	●	●	●

Series Variations

Series	Action	Type	Bore size [mm] 6	10	16	Variations Built-in magnet	Air cushion	Page
Standard **CJ2-Z**	Double acting	Single rod	●	●	●	●	●	5
	Double acting	Double rod	●	●	●	●	●	23
	Single acting	Single rod (Spring return /extend)	●	●	●	●		30
Non-rotating rod **CJ2K-Z**	Double acting	Single rod		●	●	●		47
	Single acting	Single rod (Spring return /extend)		●	●	●		54
Built-in speed controller **CJ2Z-Z**	Double acting	Single rod		●	●	●		66
	Double acting	Double rod		●	●	●		73
Direct mount **CJ2R-Z**	Double acting	Single rod		●	●	●		78
	Single acting	Single rod (Spring return /extend)		●	●	●		82
Direct mount, Non-rotating rod **CJ2RK-Z**	Double acting	Single rod		●	●	●		86
	Single acting	Single rod (Spring return /extend)		●	●	●		89
With end lock **CBJ2**	Double acting	Single rod			●	●		93
Smooth Cylinder **CJ2Y-Z**	Double acting	Single rod		●	●	●		CAT.ES20-235
Low Speed Cylinder **CJ2X-Z**	Double acting	Single rod		●	●	●		CAT.ES20-235

∗: The air cylinder with end lock has the same shape as the current product. ∗: For details about the clean series, refer to the **WEB catalog**.
∗: Air cushion is only available for ø10 and ø16.

Series CJ2

● : Standard
◎ : Made to Order
○ : Special product (Please contact SMC for details.)
— : Not available

Symbol	Specifications	Applicable bore size	CJ2 (Standard type)				CJ2K (Non-rotating rod type)		
			Double acting		Single acting		Double acting	Single acting	
			Single rod	Double rod	Single rod (spring return)	Single rod (spring extend)	Single rod	Single rod (spring return)	Single rod (spring extend)
			5	23	30		47	54	
			ø6 to ø16				ø10, ø16		
Standard	Standard	ø6 to ø16	●	●	●	●	●	●	●
D	Built-in magnet		●	●	●	●	●	●	●
CJ2□-□A	Air cushion	ø10, ø16	●	●	—	—	—	—	—
10-, 11-	Clean series*1	ø6 to ø16	●	●*10	○	○	—	—	—
25A-	Copper (Cu) and Zinc (Zn)-free*6	ø10, ø16	●	○	○	○	○	○	○
XB6	Heat resistant cylinder (–10 to 150°C)*3, 4	ø6 to ø16	◎	◎	○	○	○	○	○
XB7	Cold resistant cylinder (–40 to 70°C)*3, 4		◎	◎	○	○	○	○	○
XB9	Low speed cylinder (10 to 50 mm/s)*4		◎	—	—	—	—	—	—
XB13	Low speed cylinder (5 to 50 mm/s)	ø6	◎	—	—	—	—	—	—
XC3	Special port position*2, 4	ø6 to ø16	◎	○	—	—	◎	—	—
XC8	Adjustable stroke cylinder/ Adjustable extension type*4	ø10, ø16	◎	—	○	○	○	○	○
XC9	Adjustable stroke cylinder/ Adjustable retraction type*4		◎	—	○	—	◎	○	—
XC10	Dual stroke cylinder/Double rod type*4		◎	—	○	○	◎	○	○
XC11	Dual stroke cylinder/Single rod type*4		◎	—	—	—	○	—	—
XC22	Fluororubber seal*4	ø6 to ø16	◎	◎	◎	◎	◎	○	○
XC51	With hose nipple		◎	◎	◎	◎	◎	◎	◎
XC85	Grease for food processing equipment	ø10, ø16	◎	◎	◎	◎	◎	◎	◎
X446	PTFE grease		◎	◎	◎	◎	◎	◎	◎
X773	Short pitch mounting	ø6	—	—	◎	—	—	—	—

∗1: Mounting type: Not compatible with the clevis type.
An auto switch is available in the band mounting type only.
∗2: An auto switch is available in the band mounting type only.
∗3: The products with an auto switch are not compatible.
∗4: The products with an air cushion are not compatible.
∗5: For details about the smooth cylinder and low speed cylinder, refer to the **WEB catalog** or "ES20-235" catalog.
∗6: For details, refer to the **WEB catalog**.
∗7: The shape is the same as the current product.
∗8: Available only for locking at head end.
∗9: Available only for locking at rod end.
∗10: ø10 and ø16 only
∗11: Copper and fluorine-free [20-] are available as standard products.

CJ2Z (Built-in speed controller type)		CJ2R (Direct mount type)			CJ2RK (Direct mount, Non-rotating rod type)			CBJ2 (With end lock)*7	CJ2Y*5 Smooth Cylinder	CJ2X*5 Low Speed Cylinder	
Double acting		Double acting	Single acting		Double acting	Single acting		Double acting	Double acting	Double acting	
Single rod	Double rod	Single rod	Single rod (spring return)	Single rod (spring extend)	Single rod	Single rod (spring return)	Single rod (spring extend)	Single rod	Single rod	Single rod	
66	73	78	82		86	89		93	—	—	
ø10, ø16								ø16	ø10, ø16	ø10, ø16	Symbol
●	●	●	●	●	●	●	●	●	●	●	Standard
●	●	●	●	●	●	●	●	●	●	●	D
—	—	○	—	—	—	—	—	—	—	—	CJ2□-□A
—	—	●	○	○	—	—	—	○*8	—	—	10-, 11-
○	○	○	○	○	○	○	○	○	○	○	25A-
○	○	○	○	○	○	○	○	○	—	—	XB6
○	○	○	○	○	○	○	○	—	—	—	XB7
—	—	—	—	—	—	—	—	○	—	—	XB9
—	—	—	—	—	—	—	—	—	—	—	XB13
—	—	○	—	—	○	—	—	○	◎	○	XC3
○	—	○	○	○	○	○	○	—	—	—	XC8
—	—	◎	○	—	◎	○	—	○*9	◎	—	XC9
○	—	○	○	○	○	○	○	○	○	—	XC10
—	—	○	—	—	○	—	—	○*9	—	—	XC11
○	○	◎	○	○	○	○	○	○	—	—	XC22
◎	◎	◎	◎	◎	◎	◎	◎	—	—	—	XC51
◎	◎	◎	◎	◎	◎	◎	◎	—	—	—	XC85
◎	◎	◎	◎	◎	◎	◎	◎	—	—	—	X446
—	—	—	—	—	—	—	—	—	—	—	X773

Air Cylinder: Standard Type
Double Acting, Single Rod
Series CJ2
ø6, ø10, ø16

RoHS

How to Order

CJ2 B 16 – 60 A Z – – –

With auto switch CDJ2 B 16 – 60 A Z – – – M9BW – B –

With auto switch
(Built-in magnet)

Mounting

B	Basic
E	Double-side bossed
D	Double clevis
L	Single foot
M	Double foot
F	Rod flange
G	Head flange

∗: Foot/Flange brackets are shipped together with the product, but not assembled.
∗: Double clevis is only available for ø10 and ø16.

Bore size

6	6 mm
10	10 mm
16	16 mm

Cylinder standard stroke [mm]
Refer to "Standard Strokes" on page 6.

Cushion

Nil	Rubber bumper
A	Air cushion

∗: ø6: Rubber bumper only

Head cover port location

Nil	Perpendicular to axis	
R	Axial	

∗: For double clevis, the product is perpendicular to the cylinder axis.
∗: For double-side bossed, the product is perpendicular to the cylinder axis.

∗: **Refer to "Ordering Example of Cylinder Assembly" on page 6.**

Pivot bracket

Nil	None
N	Pivot bracket is shipped together with the product, but not assembled.

∗: Only for CJ2D (double clevis)
∗: Pivot bracket is shipped together with the product, but not assembled.
∗: Except ø6

Rod end bracket

Nil	None
V	Single knuckle joint
W	Double knuckle joint
T	Rod end cap (Flat type)
U	Rod end cap (Round type)

∗: Rod end bracket is shipped together with the product, but not assembled.
∗: A knuckle joint pin is not provided with the single knuckle joint.
∗: ø6: Except knuckle joint

Made to Order
Refer to page 6 for details.

Auto switch mounting type

A	Rail mounting
B	Band mounting

∗: For rail mounting, screws and nuts for 2 auto switches come with the rail.
∗: Refer to page 107 for auto switch mounting brackets.
∗: ø6: Band mounting only

Number of auto switches

Nil	2 pcs.
S	1 pc.
n	"n" pcs.

Auto switch

Nil	Without auto switch

∗: For applicable auto switches, refer to the table below.
★ Enter the auto switch mounting type (A or B) even when a built-in magnet cylinder without an auto switch is required.

Applicable Auto Switches/Refer to the **WEB catalog** or the Best Pneumatics No. 2 for further information on auto switches.

Type	Special function	Electrical entry	Indicator light	Wiring (Output)	Load voltage DC	Load voltage AC	Auto switch model: Band mounting Perpendicular	Band mounting In-line	Rail mounting Perpendicular	Rail mounting In-line	Lead wire length [m] 0.5 (Nil)	1 (M)	3 (L)	5 (Z)	None (N)	Pre-wired connector	Applicable load	
Solid state auto switch	—	Grommet	Yes	3-wire (NPN)	5 V,12 V	—	**M9NV**	**M9N**	**M9NV**	**M9N**	●	●	●	○	—	○	IC circuit	Relay, PLC
				3-wire (PNP)			**M9PV**	**M9P**	**M9PV**	**M9P**	●	●	●	○	—	○		
				2-wire	12 V		**M9BV**	**M9B**	**M9BV**	**M9B**	●	●	●	○	—	○	—	
		Connector					—	**H7C**	**J79C**	—	●	—	●	●	●	—		
	Diagnostic indication (2-color indicator)	Grommet		3-wire (NPN)	5 V,12 V		**M9NWV**	**M9NW**	**M9NWV**	**M9NW**	●	●	●	○	—	○	IC circuit	
				3-wire (PNP)			**M9PWV**	**M9PW**	**M9PWV**	**M9PW**	●	●	●	○	—	○		
				2-wire	12 V		**M9BWV**	**M9BW**	**M9BWV**	**M9BW**	●	●	●	○	—	○	—	
	Water resistant (2-color indicator)			3-wire (NPN)	5 V,12 V		**M9NAV**∗1	**M9NA**∗1	**M9NAV**∗1	**M9NA**∗1	○	○	●	○	—	○	IC circuit	
				3-wire (PNP)			**M9PAV**∗1	**M9PA**∗1	**M9PAV**∗1	**M9PA**∗1	○	○	●	○	—	○		
				2-wire	12 V		**M9BAV**∗1	**M9BA**∗1	**M9BAV**∗1	**M9BA**∗1	○	○	●	○	—	○	—	
	With diagnostic output (2-color indicator)			4-wire (NPN)	5 V,12 V		—	**H7NF**	—	**F79F**	●	—	●	○	—	○	IC circuit	
Reed auto switch	—	Grommet	Yes	3-wire (NPN equivalent)	—	5 V	—	**A96V**	**A96**	**A96V**	**A96**	●	—	●	—	—	—	IC circuit	—
				2-wire		—	200 V	—	—	**A72**	**A72H**	●	—	●	—	—	—	—	Relay, PLC
					24 V	12 V	100 V	**A93V**∗2	**A93**	**A93V**∗2	**A93**	●	●	●	●	—	—		
			No				100 V or less	**A90V**	**A90**	**A90V**	**A90**	●	—	●	—	—	—	IC circuit	
			Yes				—	—	**C73C**	**A73C**	—	●	—	●	●	●	—	—	
		Connector	No				24 V or less	—	**C80C**	**A80C**	—	●	—	●	●	●	—	IC circuit	
	Diagnostic indication (2-color indicator)	Grommet	Yes		—	—	—	—	**A79W**	—	●	—	●	—	—	—	—	

∗1: Water resistant type auto switches can be mounted on the above models, but in such case SMC cannot guarantee water resistance. Please contact SMC regarding water resistant types with the above model numbers.
∗2: 1 m type lead wire is only applicable to D-A93.
∗: Lead wire length symbols: 0.5 m····· Nil (Example) M9NW
1 m····· M (Example) M9NWM
3 m····· L (Example) M9NWL
5 m····· Z (Example) M9NWZ
None····· N (Example) H7CN

∗: Since there are other applicable auto switches than listed above, refer to page 108 for details.
∗: For details about auto switches with pre-wired connector, refer to the **WEB catalog** or the Best Pneumatics No. 2.
∗: Solid state auto switches marked with "○" are produced upon receipt of order.
∗: The D-A9□□/M9□□□/A7□□/A80□/F7□□/J7□□ auto switches are shipped together, (but not assembled). (For band mounting, only the auto switch mounting brackets are assembled before shipment.)

Symbol

Rubber bumper

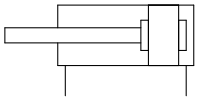

Air cushion

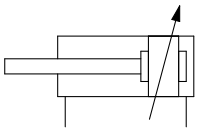

Made to Order

Made to Order

(For details, refer to pages 111 to 120.)

Symbol	Specifications
-XA□	Change of rod end shape
-XB6	Heat resistant cylinder (–10 to 150°C) ∗ Not available with switch & with air cushion
-XB7	Cold resistant cylinder (–40 to 70°C) ∗ Not available with switch & with air cushion
-XB9	Low speed cylinder (10 to 50 mm/s) ∗ Not available with air cushion
-XB13∗1	Low speed cylinder (5 to 50 mm/s) ∗ Not available with air cushion
-XC3	Special port location ∗ Not available with air cushion
-XC8	Adjustable stroke cylinder/Adjustable extension type
-XC9	Adjustable stroke cylinder/Adjustable retraction type
-XC10	Dual stroke cylinder/Double rod type
-XC11	Dual stroke cylinder/Single rod type
-XC22	Fluororubber seal ∗ Not available with air cushion
-XC51	With hose nipple
-XC85	Grease for food processing equipment
-X446	PTFE grease
-X773∗1	Short pitch mounting

∗1: ø6 only

Ordering Example of Cylinder Assembly

Cylinder model:
CDJ2D16-60Z-NW-M9BW-B

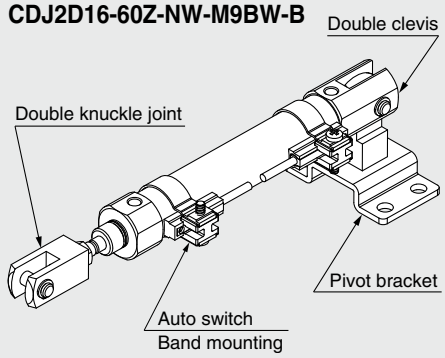

Mounting D: Double clevis
Pivot bracket N: Yes
Rod end bracket W: Double knuckle joint
Auto switch D-M9BW: 2 pcs.
Auto switch mounting B: Band mounting

∗: Pivot bracket, double knuckle joint and auto switch are shipped together with the product, but not assembled.

∗: Except ø6

Specifications

Bore size [mm]		6	10	16
Action		Double acting, Single rod		
Fluid		Air		
Proof pressure		1 MPa		
Maximum operating pressure		0.7 MPa		
Minimum operating pressure	Rubber bumper	0.12 MPa	0.06 MPa	
	Air cushion	—	0.1 MPa	
Ambient and fluid temperature		Without auto switch: –10°C to 70°C With auto switch: –10°C to 60°C (No freezing)		
Cushion		Rubber bumper	Rubber bumper/Air cushion	
Lubrication		Not required (Non-lube)		
Piston speed	Rubber bumper	50 to 750 mm/s		
	Air cushion	—	50 to 1000 mm/s	
Allowable kinetic energy	Rubber bumper	0.012 J	0.035 J	0.090 J
	Air cushion (Effective cushion length)	—	0.07 J (9.4 mm)	0.18 J (9.4 mm)
Stroke length tolerance		+1.0 0		

Standard Strokes

[mm]

Bore size	Standard stroke	Maximum manufacturable stroke
6	15, 30, 45, 60	200
10	15, 30, 45, 60, 75, 100, 125, 150	400
16	15, 30, 45, 60, 75, 100, 125, 150, 175, 200	400

∗: Manufacture of intermediate strokes in 1 mm increments is possible. (Spacers are not used.) Produced upon receipt of order.

∗: Applicable strokes should be confirmed according to the usage. For details, refer to "Air Cylinders Model Selection" on front matter pages of the Best Pneumatics No. 2 or the **WEB catalog**. In addition, the products that exceed the standard stroke might not be able to fulfill the specifications due to the deflection etc.

Mounting and Accessories

/Refer to page 22 for details about part numbers and dimensions.

●···Mounted on the product. ○···Can be ordered within the cylinder model.

	Mounting	Basic	Foot	Flange	Double∗ clevis	Double clevis (including T-bracket)
Standard	Mounting nut	●	●	●	—	—
	Rod end nut	●	●	●	●	●
	Clevis pin	—	—	—	●	●
Option	Single knuckle joint	○	○	○	○	○
	Double knuckle joint∗	○	○	○	○	○
	Rod end cap (Flat/Round type)	○	○	○	○	○
	T-bracket	—	—	—	○	●

∗: A pin and retaining rings are included with double clevis and/or double knuckle joint.

∗: Double clevis is only available for ø10 and ø16.

Mounting Brackets/Part No.

Mounting bracket	Bore size [mm]		
	6	10	16
Foot	CJ-L006C	CJ-L010C	CJ-L016C
Flange	CJ-F006C	CJ-F010C	CJ-F016C
T-bracket∗	—	CJ-T010C	CJ-T016C

∗: T-bracket is used with double clevis (D).

Refer to pages 101 to 108 for cylinders with auto switches.

- Auto switch proper mounting position (detection at stroke end) and its mounting height
- Minimum stroke for auto switch mounting
- Operating range
- Auto switch mounting brackets/Part no.

Moisture Control Tube Series IDK

When operating an actuator with a small diameter and a short stroke at a high frequency, the dew condensation (water droplet) may occur inside the piping depending on the conditions.
Simply connecting the moisture control tube to the actuator will prevent dew condensation from occurring. For details, refer to **the IDK series in the WEB catalog**.

Weights

[g]

Bore size [mm]		Rubber bumper			Air cushion	
		6	10	16	10	16
Basic weight (When the stroke is zero)	Basic	20	22	46	39	66
	Axial piping	17	22	46	39	66
	Double clevis (including clevis pin)	—	24	54	43	74
	Head-side bossed	20	23	48	40	68
Additional weight per 15 mm of stroke		2	4	7	4	7
Mounting bracket weight	Single foot	8	8	25	8	25
	Double foot	16	16	50	16	50
	Rod flange	5	5	13	5	13
	Head flange	5	5	13	5	13
Accessories	Single knuckle joint	—	17	23	17	23
	Double knuckle joint (including knuckle pin)	—	25	21	25	21
	Rod end cap (Flat type)	1	1	2	1	2
	Rod end cap (Round type)	1	1	2	1	2
	T-bracket	—	32	50	32	50

⚠ Precautions

Refer to page 121 before handling.

∗: Mounting nut and rod end nut are included in the basic weight.

∗: Mounting nut is not included in the basic weight for the double clevis.

Calculation:

Example) **CJ2L10-45Z**

- Basic weight ····· 22 (ø10)
- Additional weight ····· 4/15 stroke
- Cylinder stroke····· 45 stroke
- Mounting bracket weight····· 8 (Axial foot)

22 + 4/15 x 45 + 8 = **42 g**

Clean Series

10-CJ2 [Mounting] **6 / 10 / 16** – [Stroke] [Head cover port location] **Z**

- **Clean Series**

Air cylinder which is applicable for the system which discharges leakage from the rod section directly into the outside of clean room by relief port and making an actuator's rod section having a double seal construction.

Specifications

Action		Double acting, Single rod
Bore size [mm]		6, 10, 16
Maximum operating pressure		0.7 MPa
Minimum operating pressure	**ø6**	0.14 MPa
	ø10, ø16	0.08 MPa
Cushion		Rubber bumper/Air cushion
Standard stroke [mm]		Same as standard type. (Refer to page 6.)
Auto switch		Mountable (Band mounting)
Mounting		Basic, Double-side bossed∗, Single/Double foot∗, Rod/Head flange∗

∗: ø10 and ø16 only

Construction

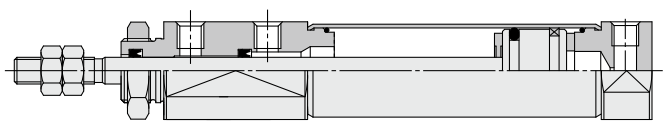

∗: The above figure is for ø16.

For the detailed specifications, refer to the "Pneumatic Clean Series" (**WEB catalog**).

Low Speed Cylinder

CJ2 X [Mounting] **10 / 16** – [Stroke] [Head cover port location] **Z**

- **Low Speed Cylinder**

Smooth operation with a little sticking and slipping at low speed. Can start smoothly with a little ejection even after being rendered for hours.

The dimensions are the same as the double acting, single rod type.

Specifications

Action		Double acting, Single rod
Bore size [mm]		10, 16
Fluid		Air
Proof pressure		1.05 MPa
Maximum operating pressure		0.7 MPa
Minimum operating pressure		0.06 MPa
Ambient and fluid temperature		Without auto switch: –10 to 70°C With auto switch: –10 to 60°C (No freezing)
Cushion		Rubber bumper (Standard equipment)
Lubrication		Not required (Non-lube)
Stroke length tolerance		$^{+1.0}_{0}$
Piston speed		1 to 300 mm/s
Allowable kinetic energy	**ø10**	0.035 J
	ø16	0.090 J

For details, refer to the **WEB catalog** or "ES20-235" catalog.

Construction (Not able to disassemble)

ø6
Rubber bumper

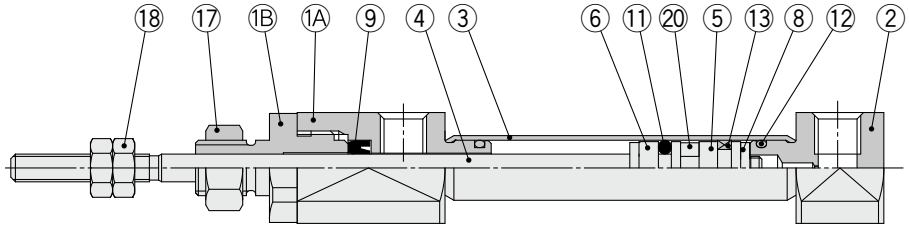

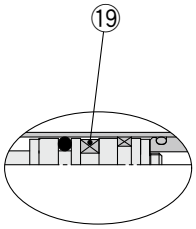

With auto switch

ø10, ø16
Rubber bumper

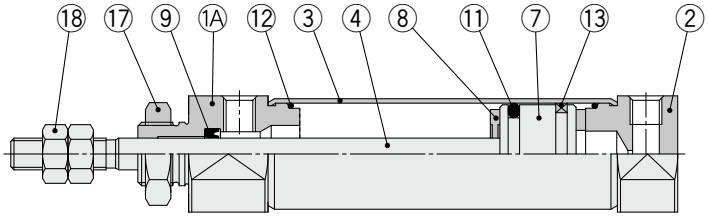

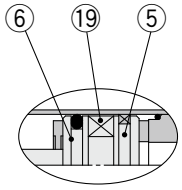

With auto switch

ø10, ø16
Air cushion

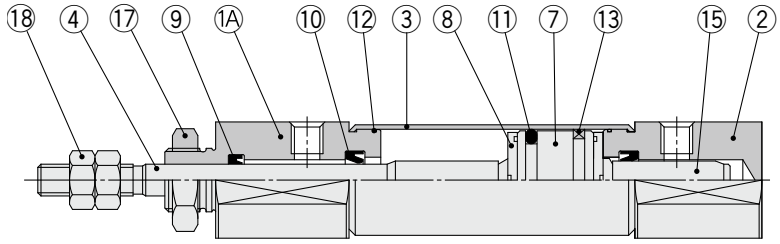

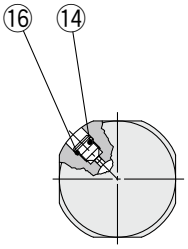

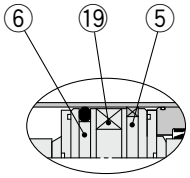

With auto switch

Component Parts

No.	Description	Material	Note
1A	**Rod cover**	Aluminum alloy	
1B	**Seal retainer**	Aluminum alloy	ø6 only
2	**Head cover**	Aluminum alloy	
3	**Cylinder tube**	Stainless steel	
4	**Piston rod**	Stainless steel	
5	**Piston A**	Aluminum alloy	
6	**Piston B**	Aluminum alloy	
7	**Piston**	Aluminum alloy	
8	**Bumper**	Urethane	
9	**Rod seal**	NBR	
10	**Cushion seal**	NBR	

No.	Description	Material	Note
11	**Piston seal**	NBR	
12	**Tube gasket**	NBR	
13	**Wear ring**	Resin	
14	**Cushion needle**	Carbon steel	
15	**Cushion ring**	Aluminum alloy	
16	**Needle seal**	NBR	
17	**Mounting nut**	Rolled steel	
18	**Rod end nut**	Rolled steel	
19	**Magnet**	—	
20	**Spacer**	Aluminum alloy	ø6: Without magnet

Dimensions

Basic (B)

CJ2B6 – Stroke Head cover port location Z

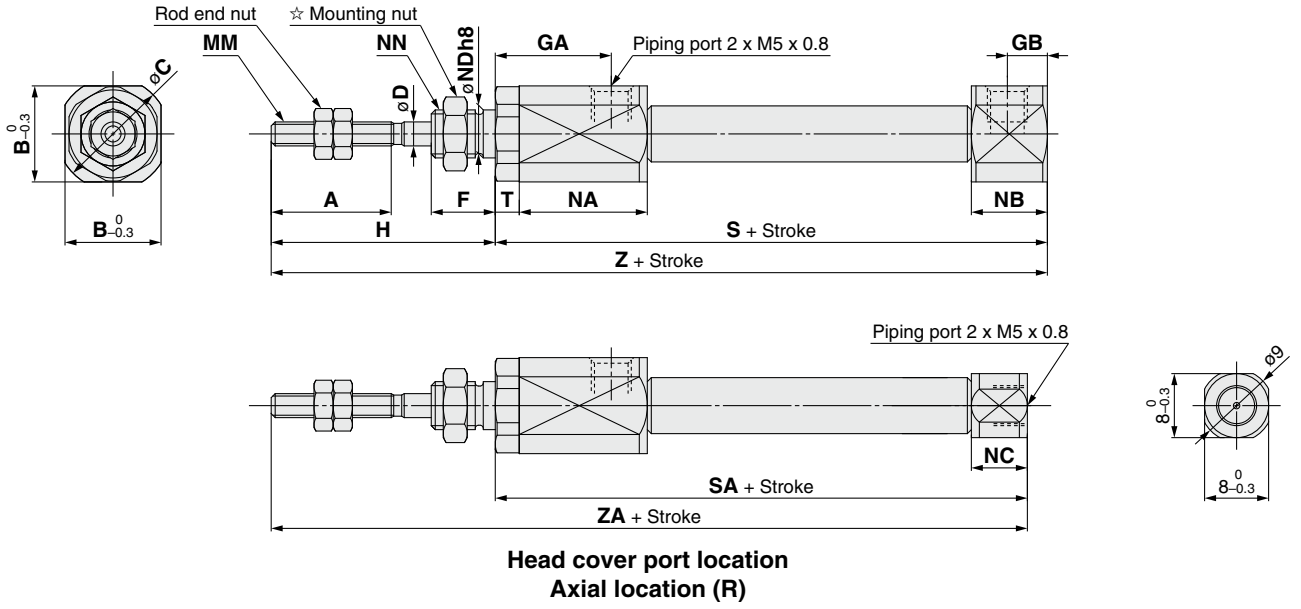

Head cover port location
Axial location (R)

CJ2B $^{10}_{16}$ – Stroke Head cover port location Z

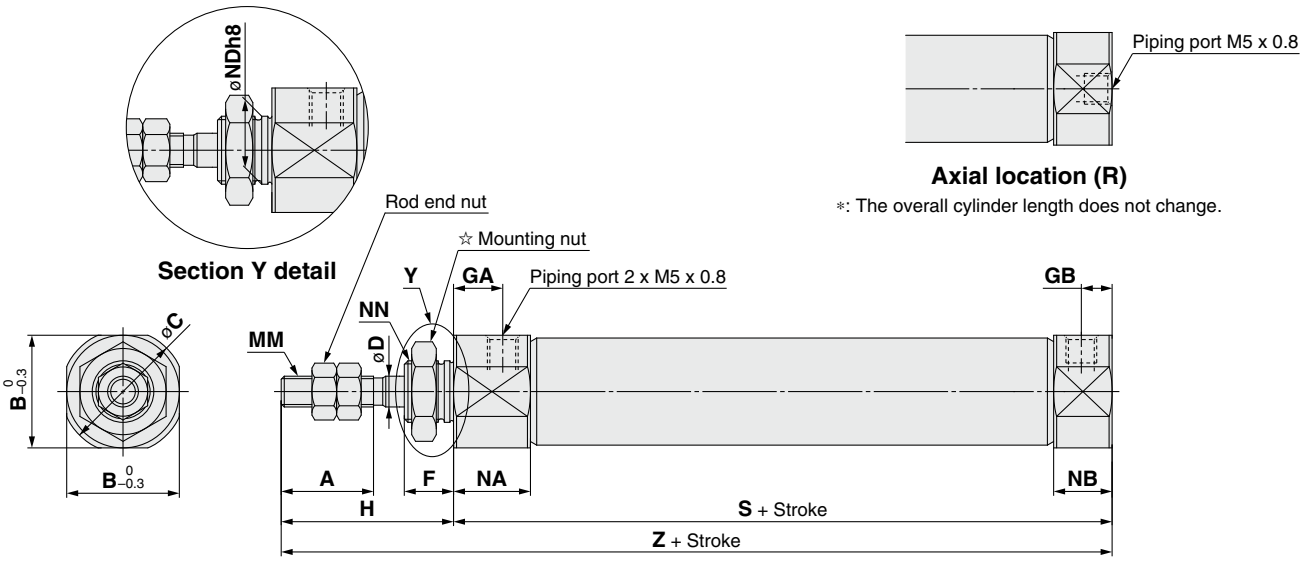

☆ For details of the mounting nut, refer to page 22.

[mm]

Bore size	A	B	C	D	F	GA	GB	H	MM	NA	NB	NC	NDh8	NN	S	SA	T	Z	ZA
6	15	12	14	3	8	14.5	5	28	M3 x 0.5	16	9.5	7	$6^{0}_{-0.018}$	M6 x 1.0	51.5	49	3	79.5	77
10	15	12	14	4	8	8	5	28	M4 x 0.7	12.5	9.5	—	$8^{0}_{-0.022}$	M8 x 1.0	46	—	—	74	—
16	15	18.3	20	5	8	8	5	28	M5 x 0.8	12.5	9.5	—	$10^{0}_{-0.022}$	M10 x 1.0	47	—	—	75	—

Dimensions

Basic (B)

With air cushion: CJ2B $\frac{10}{16}$ – Stroke A Head cover port location Z

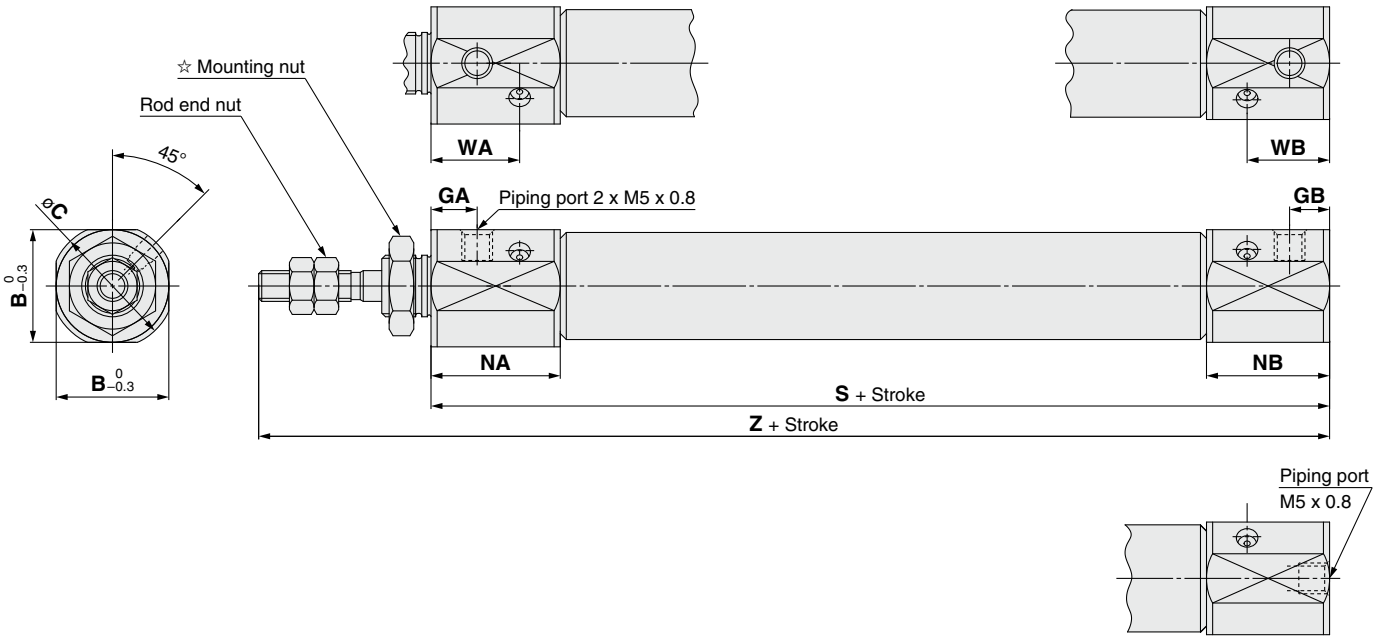

Head cover port location
Axial location (R)

∗: The overall cylinder length does not change.

☆ For details of the mounting nut, refer to page 22.

Dimensions other than the table below are the same as those on page 9. [mm]

Bore size	B	C	GA	GB	NA	NB	WA	WB	S	Z
10	15	17	7.5	6.5	21	20	14.4	13.4	65	93
16	18.3	20	7.5	6.5	21	20	14.4	13.4	66	94

Dimensions

Single foot (L)

CJ2L6 – Stroke Head cover port location Z

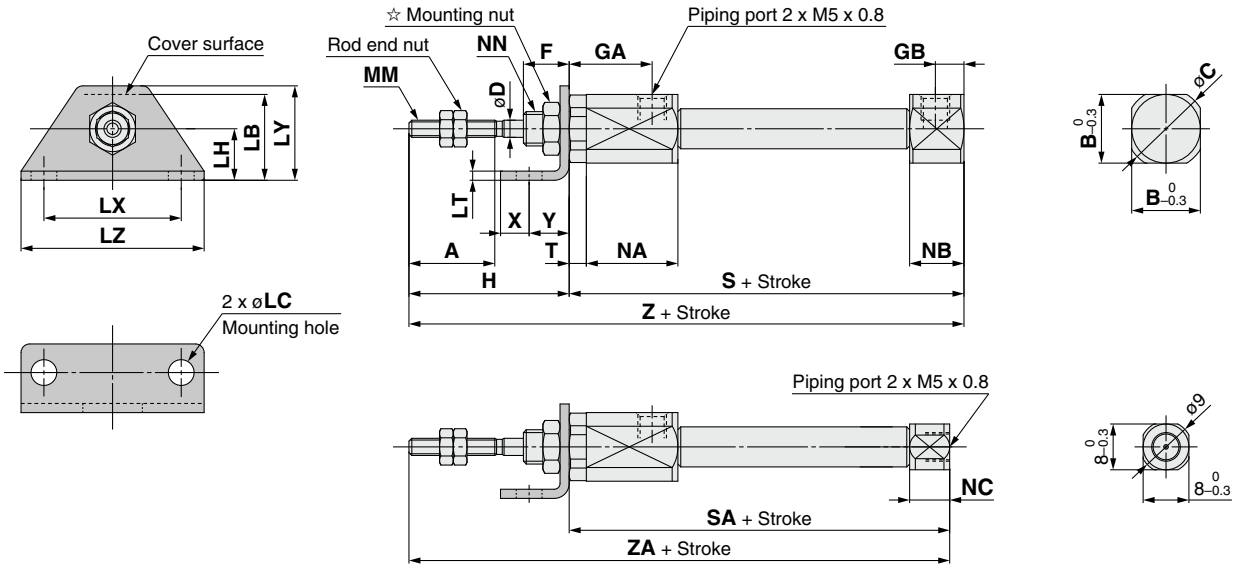

Head cover port location
Axial location (R)

CJ2L $^{10}_{16}$ – Stroke Head cover port location Z

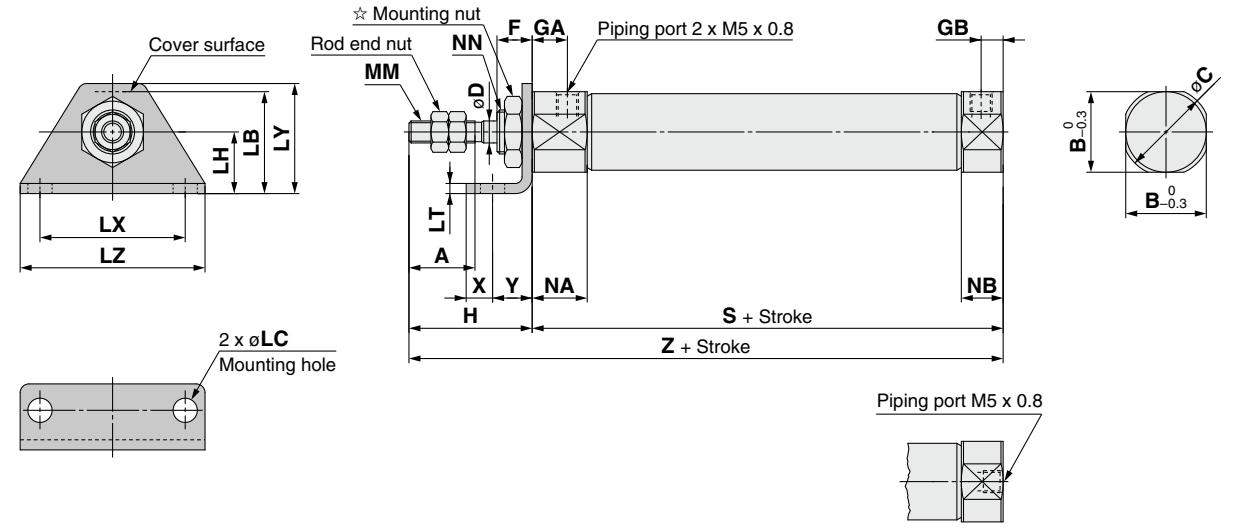

Head cover port location
Axial location (R)

∗: The overall cylinder length does not change.

☆ For details of the mounting nut, refer to page 22.

[mm]

Bore size	A	B	C	D	F	GA	GB	H	LB	LC	LH	LT	LX	LY	LZ	MM	NA	NB	NC	NN	S	SA	T	X	Y	Z	ZA
6	15	12	14	3	8	14.5	5	28	15	4.5	9	1.6	24	16.5	32	M3 x 0.5	16	9.5	7	M6 x 1.0	51.5	49	3	5	7	79.5	77
10	15	12	14	4	8	8	5	28	15	4.5	9	1.6	24	16.5	32	M4 x 0.7	12.5	9.5	—	M8 x 1.0	46	—	—	5	7	74	—
16	15	18.3	20	5	8	8	5	28	23	5.5	14	2.3	33	25	42	M5 x 0.8	12.5	9.5	—	M10 x 1.0	47	—	—	6	9	75	—

Dimensions

Single foot (L)

With air cushion: CJ2L $\frac{10}{16}$ – Stroke A Head cover port location Z

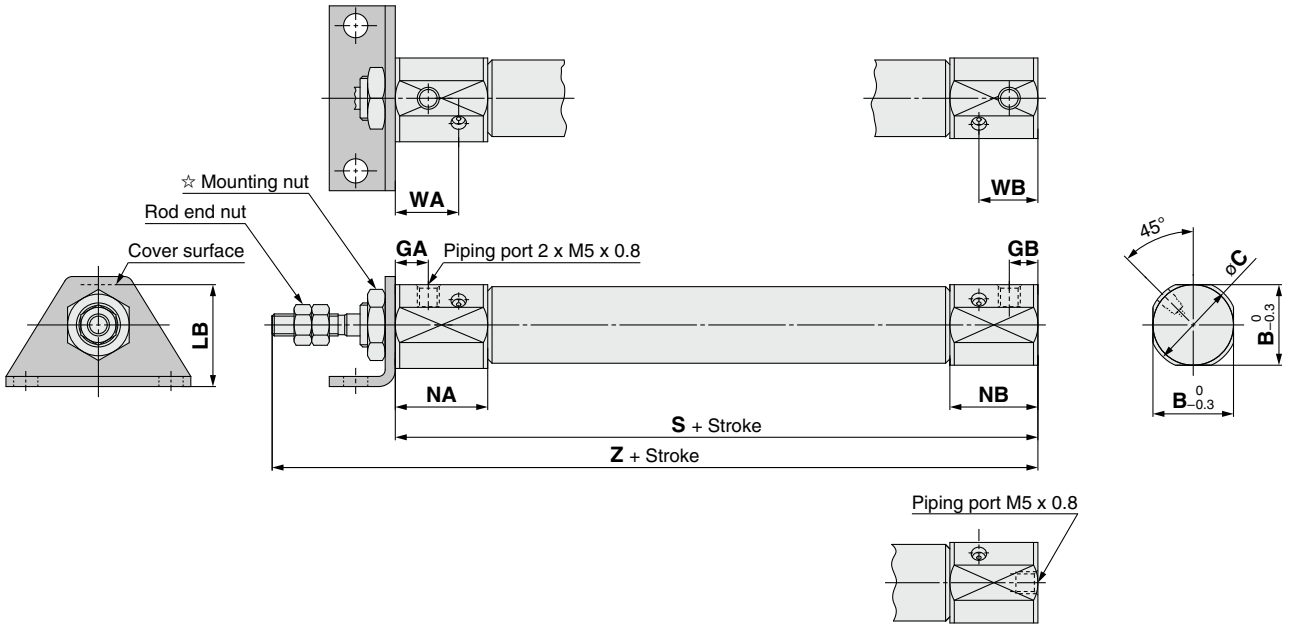

Head cover port location
Axial location (R)

∗: The overall cylinder length does not change.

☆ For details of the mounting nut, refer to page 22.

Dimensions other than the table below are the same as those on page 11. [mm]

Bore size	B	C	GA	GB	LB	NA	NB	WA	WB	S	Z
10	15	17	7.5	6.5	16.5	21	20	14.4	13.4	65	93
16	18.3	20	7.5	6.5	23	21	20	14.4	13.4	66	94

Dimensions

Double foot (M)

CJ2M6 – Stroke Z

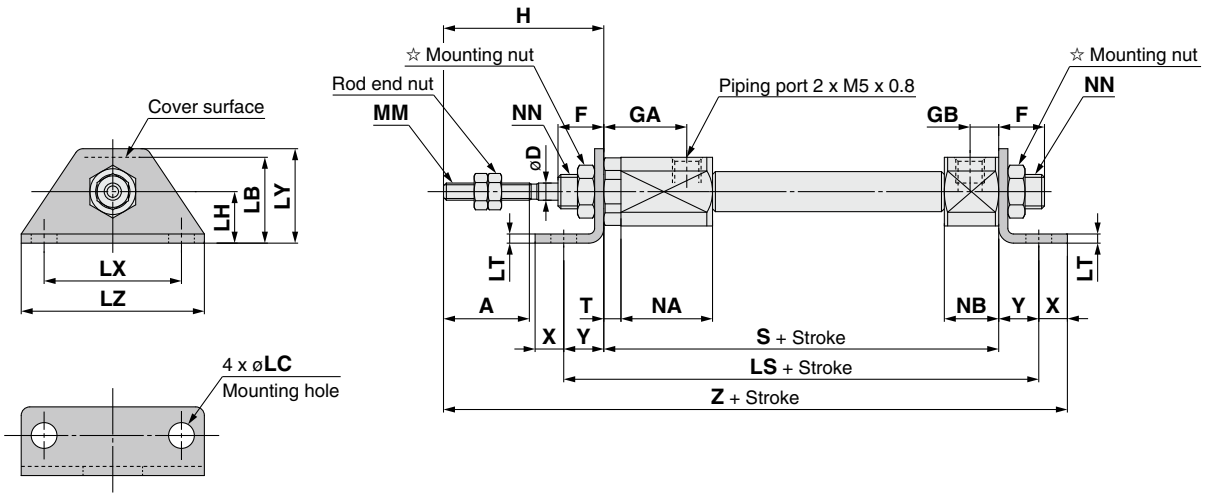

CJ2M $^{10}_{16}$ – Stroke Z

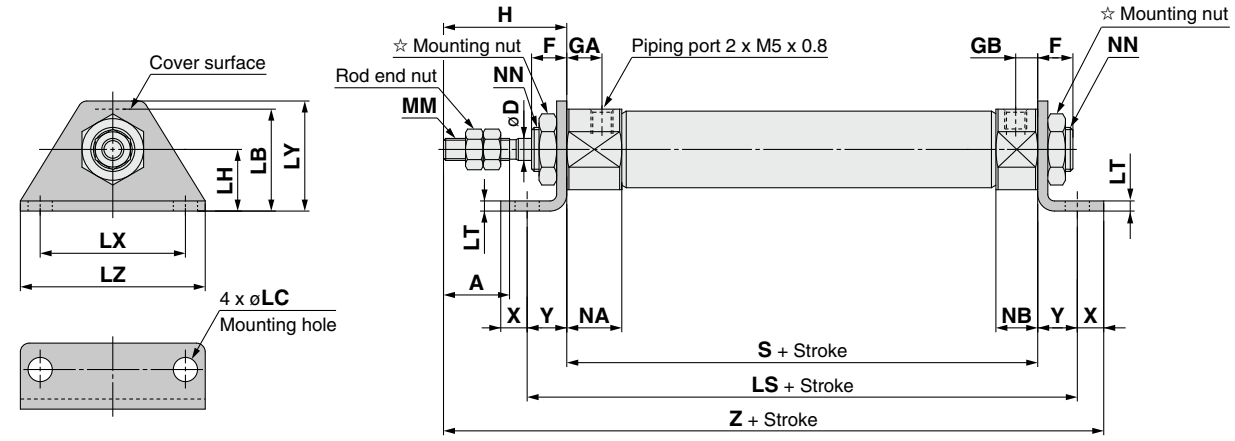

☆ For details of the mounting nut, refer to page 22.

[mm]

Bore size	A	D	F	GA	GB	H	LB	LC	LH	LS	LT	LX	LY	LZ	MM	NA	NB	NN	S	T	X	Y	Z
6	15	3	8	14.5	5	28	15	4.5	9	65.5	1.6	24	16.5	32	M3 x 0.5	16	9.5	M6 x 1.0	51.5	3	5	7	91.5
10	15	4	8	8	5	28	15	4.5	9	60	1.6	24	16.5	32	M4 x 0.7	12.5	9.5	M8 x 1.0	46	—	5	7	86
16	15	5	8	8	5	28	23	5.5	14	65	2.3	33	25	42	M5 x 0.8	12.5	9.5	M10 x 1.0	47	—	6	9	90

Dimensions

Double foot (M)

With air cushion: CJ2M $\frac{10}{16}$ – Stroke AZ

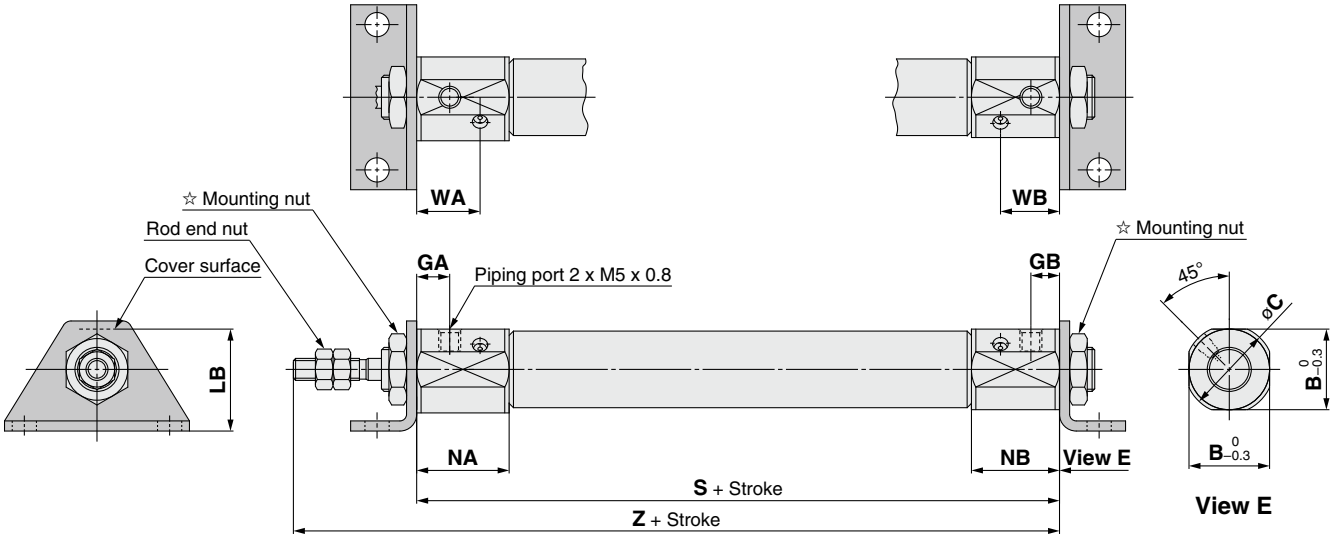

☆ For details of the mounting nut, refer to page 22.

With Air Cushion/Dimensions other than the table below are the same as those on page 13. [mm]

Bore size	B	C	GA	GB	LB	NA	NB	WA	WB	S	Z
10	15	17	7.5	6.5	16.5	21	20	14.4	13.4	65	93
16	18.3	20	7.5	6.5	23	21	20	14.4	13.4	66	94

Dimensions

Rod flange (F)

CJ2F6 – Stroke Head cover port location Z

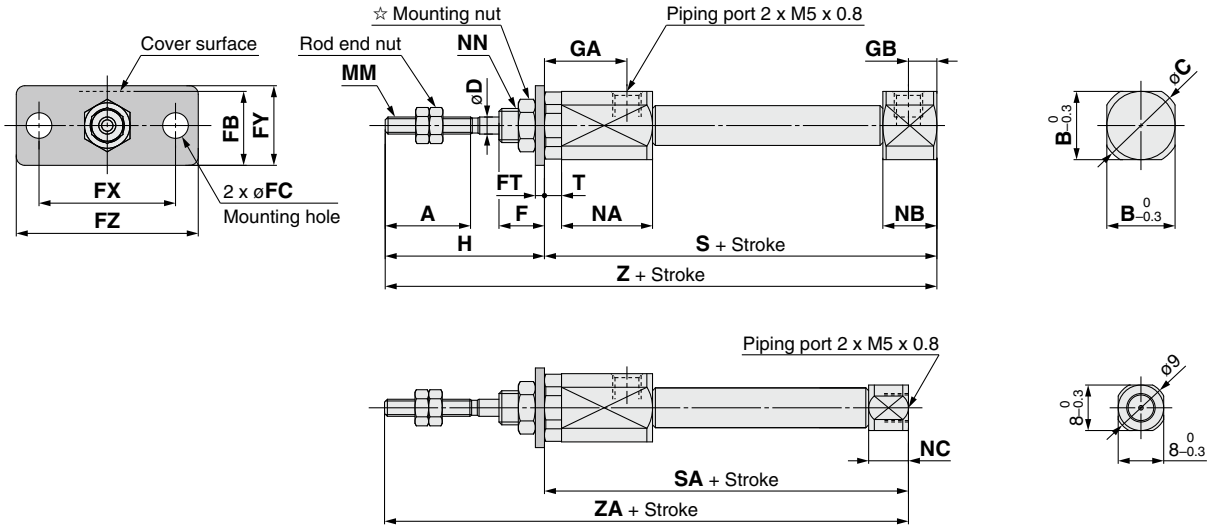

Head cover port location
Axial location (R)

CJ2F $^{10}_{16}$ – Stroke Head cover port location Z

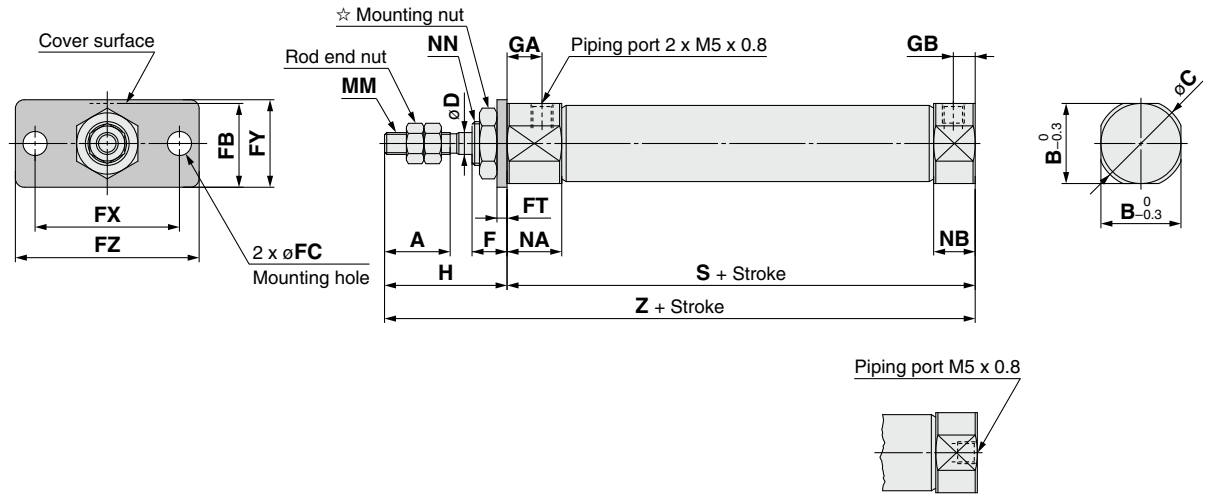

Head cover port location
Axial location (R)

∗: The overall cylinder length does not change.

☆ For details of the mounting nut, refer to page 22.

[mm]

Bore size	A	B	C	D	F	FB	FC	FT	FX	FY	FZ	GA	GB	H	MM	NA	NB	NC	NN	S	SA	T	Z	ZA
6	15	12	14	3	8	13	4.5	1.6	24	14	32	14.5	5	28	M3 x 0.5	16	9.5	7	M6 x 1.0	51.5	49	3	79.5	77
10	15	12	14	4	8	13	4.5	1.6	24	14	32	8	5	28	M4 x 0.7	12.5	9.5	—	M8 x 1.0	46	—	—	74	—
16	15	18.3	20	5	8	19	5.5	2.3	33	20	42	8	5	28	M5 x 0.8	12.5	9.5	—	M10 x 1.0	47	—	—	75	—

Dimensions

Rod flange (F)

With air cushion: CJ2F $\frac{10}{16}$ – Stroke A Head cover port location Z

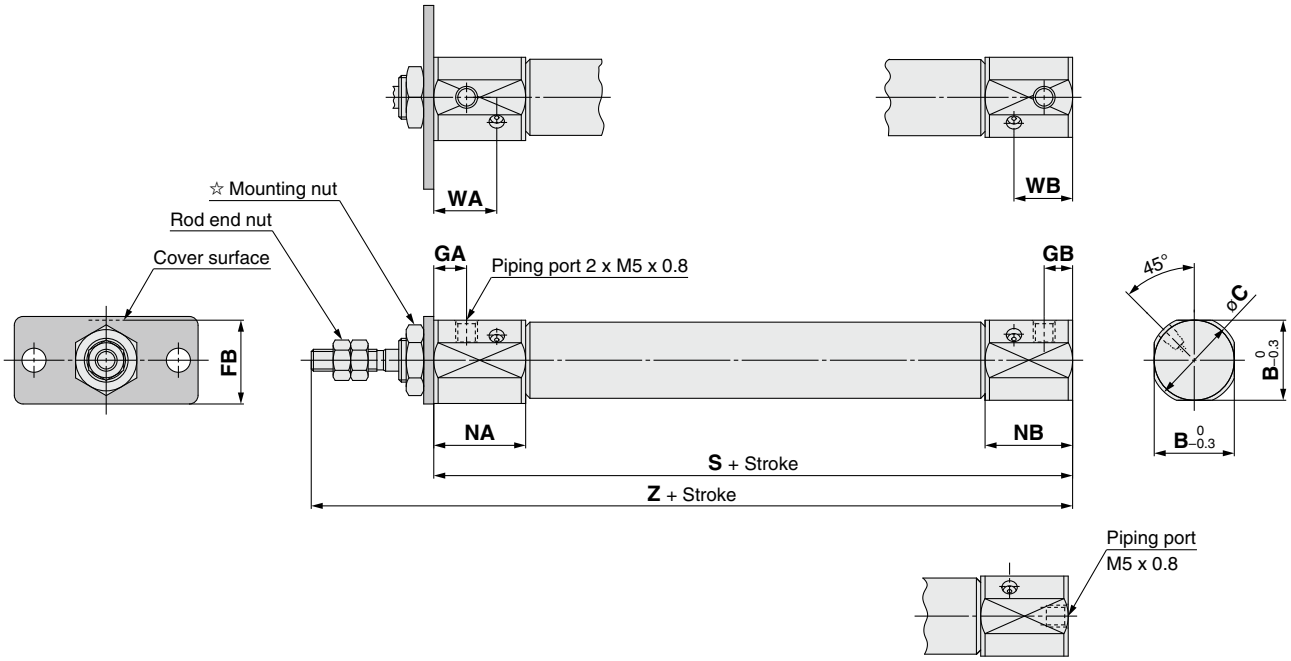

Head cover port location
Axial location (R)

∗: The overall cylinder length does not change.

☆ For details of the mounting nut, refer to page 22.

Dimensions other than the table below are the same as those on page 15. [mm]

Bore size	B	C	FB	GA	GB	NA	NB	WA	WB	S	Z
10	15	17	14.5	7.5	6.5	21	20	14.4	13.4	65	93
16	18.3	20	19	7.5	6.5	21	20	14.4	13.4	66	94

Dimensions

Head flange (G)

CJ2G6 – Stroke Z

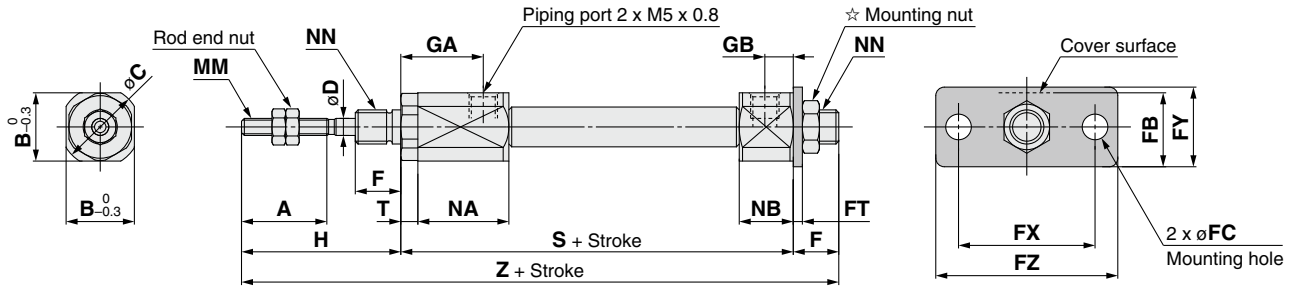

CJ2G $\begin{matrix}10\\16\end{matrix}$ – Stroke Z

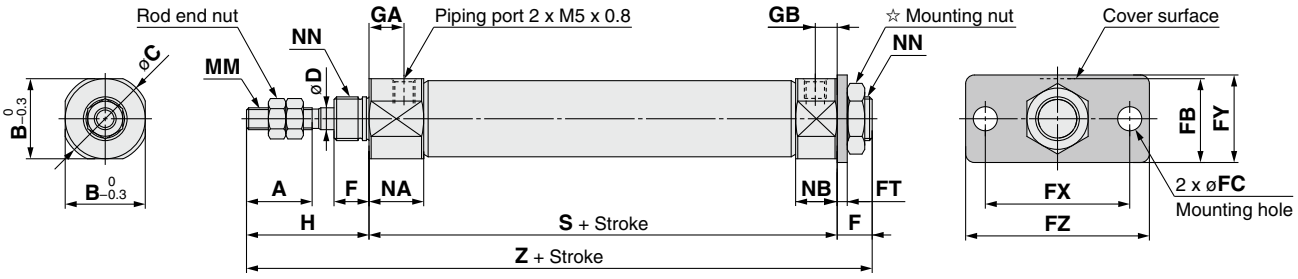

☆ For details of the mounting nut, refer to page 22.

[mm]

Bore size	A	B	C	D	F	FB	FC	FT	FX	FY	FZ	GA	GB	H	MM	NA	NB	NN	S	T	Z
6	15	12	14	3	8	13	4.5	1.6	24	14	32	14.5	5	28	M3 x 0.5	16	9.5	M6 x 1.0	51.5	3	87.5
10	15	12	14	4	8	13	4.5	1.6	24	14	32	8	5	28	M4 x 0.7	12.5	9.5	M8 x 1.0	46	—	82
16	15	18.3	20	5	8	19	5.5	2.3	33	20	42	8	5	28	M5 x 0.8	12.5	9.5	M10 x 1.0	47	—	83

Dimensions

Head flange (G)

With air cushion: CJ2G $\frac{10}{16}$ – Stroke AZ

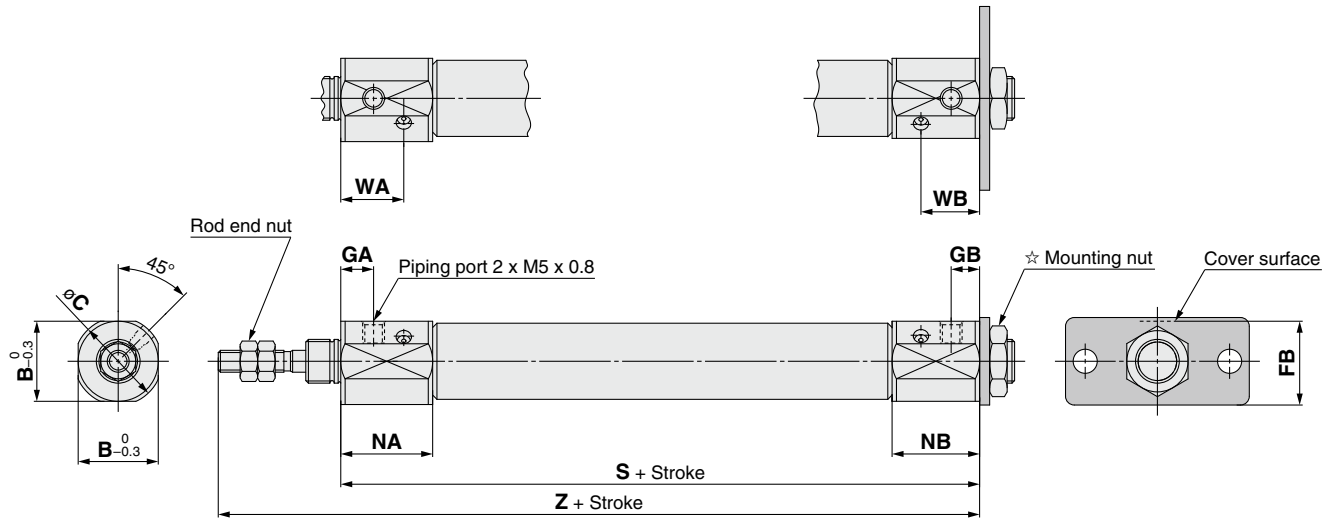

☆ For details of the mounting nut, refer to page 22.

With Air Cushion/Dimensions other than the table below are the same as those on page 17. [mm]

Bore size	B	C	FB	GA	GB	NA	NB	WA	WB	S	Z
10	15	17	14.5	7.5	6.5	21	20	14.4	13.4	65	93
16	18.3	20	19	7.5	6.5	21	20	14.4	13.4	66	94

Dimensions

Double clevis (D)

CJ2D $^{10}_{16}$ – Stroke Z

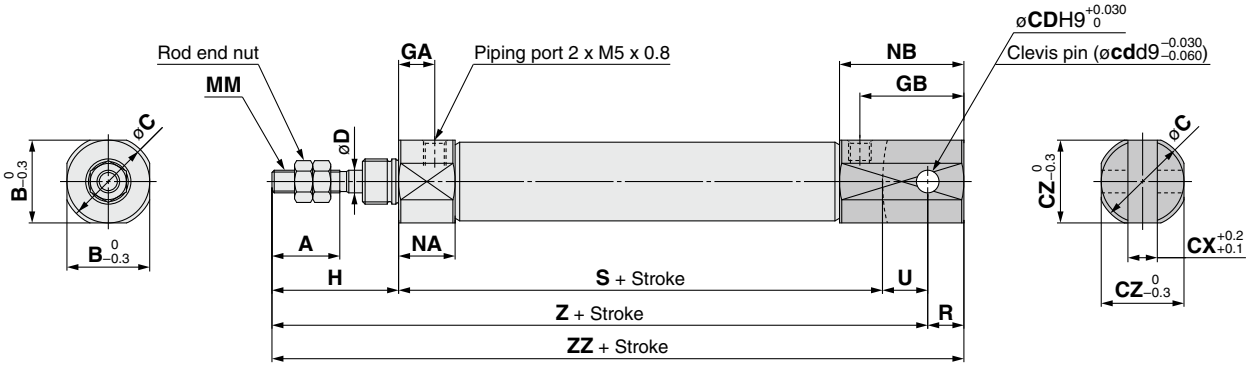

With air cushion: CJ2D $^{10}_{16}$ – Stroke AZ

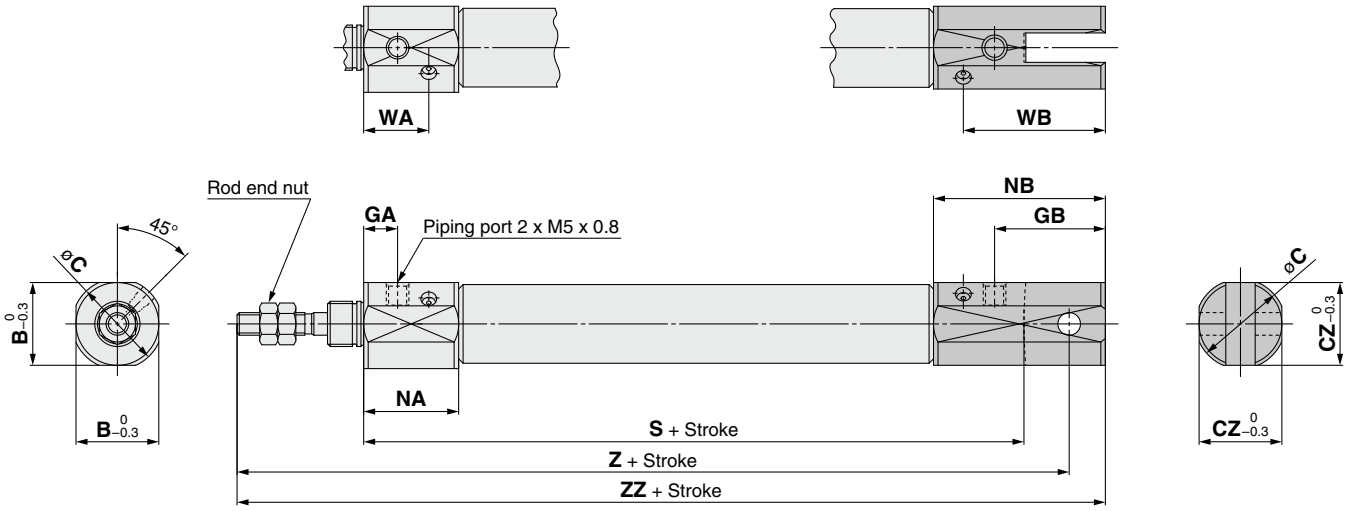

∗: A clevis pin and retaining rings are included.

[mm]

Bore size	A	B	C	CD (cd)	CX	CZ	D	GA	GB	H	MM	NA	NB	R	S	U	Z	ZZ
10	15	12	14	3.3	3.2	12	4	8	18	28	M4 x 0.7	12.5	22.5	5	46	8	82	87
16	15	18.3	20	5	6.5	18.3	5	8	23	28	M5 x 0.8	12.5	27.5	8	47	10	85	93

With Air Cushion/Dimensions other than the table below are the same as the table above. [mm]

Bore size	B	C	CZ	GA	GB	NA	NB	WA	WB	S	Z	ZZ
10	15	17	15	7.5	19.5	21	33	14.4	26.4	65	101	106
16	18.3	20	18.3	7.5	24.5	21	38	14.4	31.4	66	104	112

Dimensions

Double-side bossed (E)

CJ2E6 – Stroke Z

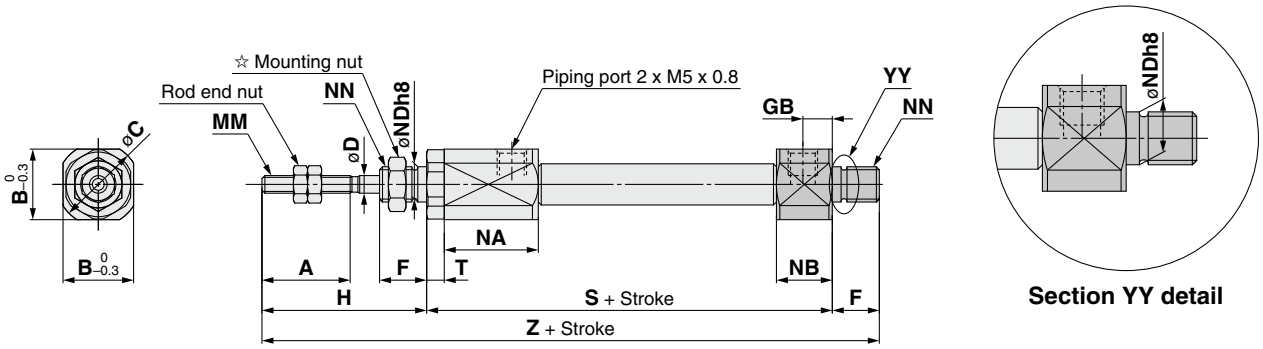

CJ2E $^{10}_{16}$ – Stroke Z

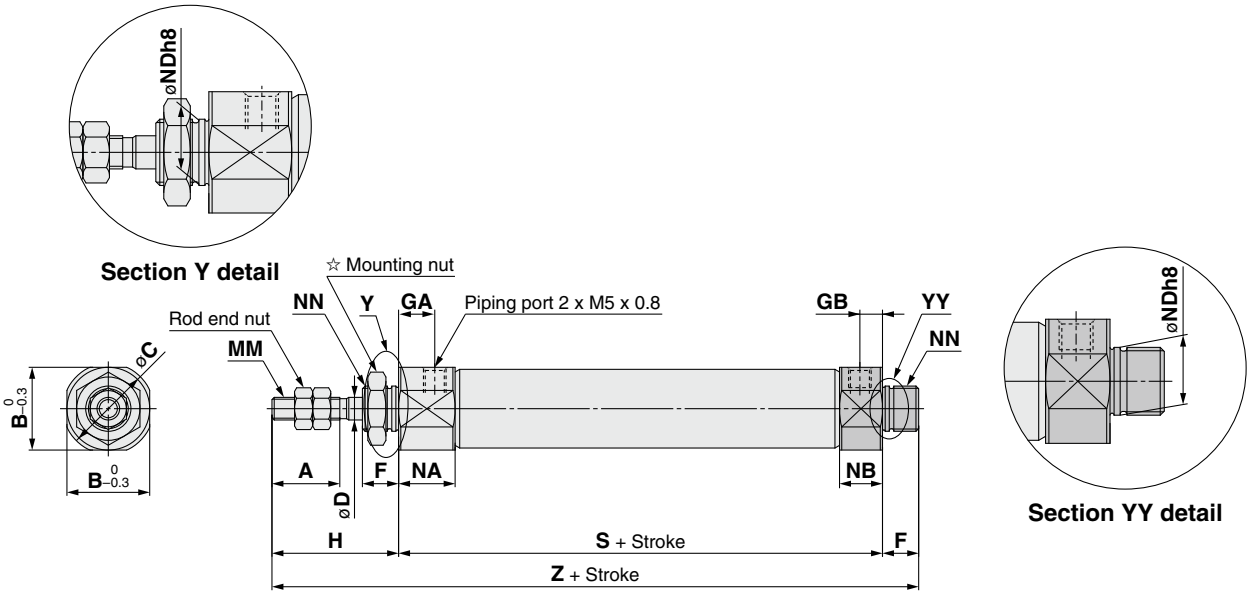

☆ For details of the mounting nut, refer to page 22.

[mm]

Bore size	A	B	C	D	F	GA	GB	H	MM	NA	NB	NDh8	NN	S	T	Z
6	15	12	14	3	8	14.5	5	28	M3 x 0.5	16	9.5	$6^{0}_{-0.018}$	M6 x 1.0	51.5	3	87.5
10	15	12	14	4	8	8	5	28	M4 x 0.7	12.5	9.5	$8^{0}_{-0.022}$	M8 x 1.0	46	—	82
16	15	18.3	20	5	8	8	5	28	M5 x 0.8	12.5	9.5	$10^{0}_{-0.022}$	M10 x 1.0	47	—	83

Dimensions

Double-side bossed (E)

With air cushion: CJ2E $\frac{10}{16}$ – Stroke AZ

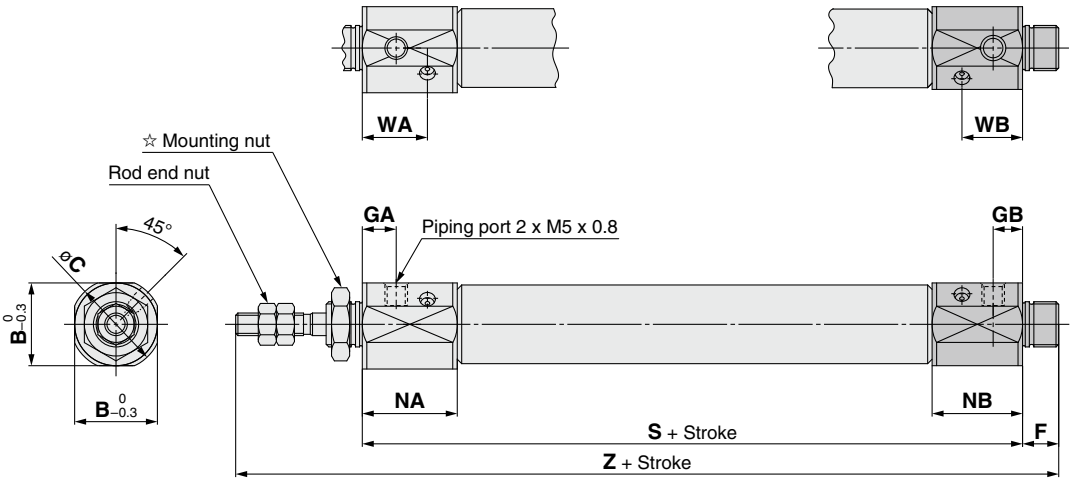

☆ For details of the mounting nut, refer to page 22.

With Air Cushion/Dimensions other than the table below are the same as those on page 20. [mm]

Bore size	B	C	GA	GB	NA	NB	WA	WB	S	Z
10	15	17	7.5	6.5	21	20	14.4	13.4	65	101
16	18.3	20	7.5	6.5	21	20	14.4	13.4	66	102

Dimensions of Accessories (Option)

Single Knuckle Joint

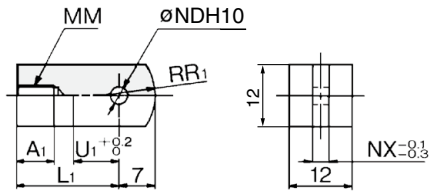

Material: Rolled steel

Part no.	Applicable bore size	A_1	L_1	MM	NDH10	NX	R_1	U_1
I-J010C	10	8	21	M4 x 0.7	$3.3^{+0.048}_{0}$	3.1	8	9
I-J016C	16	8	25	M5 x 0.8	$5^{+0.048}_{0}$	6.4	12	14

Clevis Pin

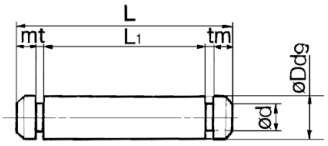

Material: Stainless steel

Part no.	Applicable bore size	Dd9	d	L	L_1	m	t	Included retaining ring
CD-J010	10	$3.3^{-0.030}_{-0.060}$	3	15.2	12.2	1.2	0.3	Type C 3.2
CD-Z015	16	$5^{-0.030}_{-0.060}$	4.8	22.7	18.3	1.5	0.7	Type C 5
CD-JA010*	10	$3.3^{-0.030}_{-0.060}$	3	18.2	15.2	1.2	0.3	Type C 3.2

*: For ø10 double clevis type, with air cushion and built-in speed controller.
*: Retaining rings are included with a clevis pin.

Knuckle Pin

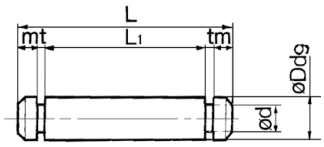

Material: Stainless steel

Part no.	Applicable bore size	Dd9	d	L	L_1	m	t	Included retaining ring
CD-J010	10	$3.3^{-0.030}_{-0.060}$	3	15.2	12.2	1.2	0.3	Type C 3.2
IY-J015	16	$5^{-0.030}_{-0.060}$	4.8	16.6	12.2	1.5	0.7	Type C 5

*: For ø10, a clevis pin is diverted.
*: Retaining rings are included with a knuckle pin.

Double Knuckle Joint

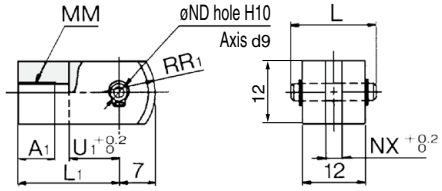

Material: Rolled steel

Part no.	Applicable bore size	A_1	L	L_1	MM
Y-J010C	10	8	15.2	21	M4 x 0.7
Y-J016C	16	11	16.6	21	M5 x 0.8

Part no.	NDd9	NDH10	NX	R_1	U_1
Y-J010C	$3.3^{-0.030}_{-0.060}$	$3.3^{+0.048}_{0}$	3.2	8	10
Y-J016C	$5^{-0.030}_{-0.060}$	$5^{+0.048}_{0}$	6.5	12	10

*: A knuckle pin and retaining rings are included.

Mounting Nut

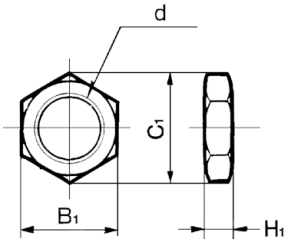

Material: Carbon steel

Part no.	Applicable bore size	B_1	C_1	d	H_1
SNJ-006C	6	8	9.2	M6 x 1.0	4
SNJ-010C	10	11	12.7	M8 x 1.0	4
SNJ-016C	16	14	16.2	M10 x 1.0	4
SNKJ-016C*	16	17	19.6	M12 x 1.0	4

*: For ø16 non-rotating type. (Use SNJ-016C for ø10 non-rotating type.)

Rod End Nut

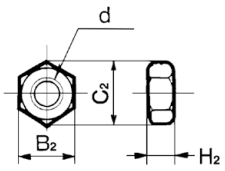

Material: Carbon steel

Part no.	Applicable bore size	B_2	C_2	d	H_2
NTJ-006B	6	5.5	6.4	M3 x 0.5	2.4
NTJ-010C	10	7	8.1	M4 x 0.7	3.2
NTJ-015C	16	8	9.2	M5 x 0.8	4

T-bracket

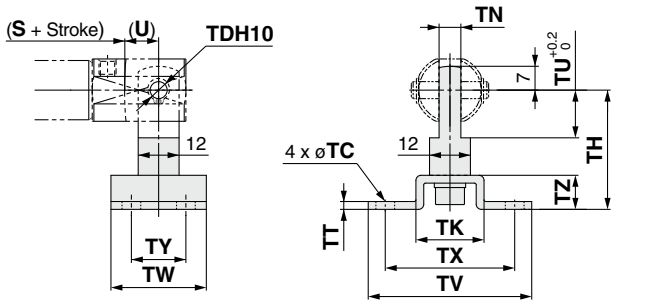

Part no.	Applicable bore size	TC	TDH10	TH	TK	TN	TT	TU	TV	TW	TX	TY	TZ
CJ-T010C	10	4.5	$3.3^{+0.048}_{0}$	29	18	3.1	2	9	40	22	32	12	8
CJ-T016C	16	5.5	$5^{+0.048}_{0}$	35	20	6.4	2.3	14	48	28	38	16	10

*: A T-bracket includes a T-bracket base, single knuckle joint, hexagon socket head bolt and spring washer.
*: For dimensions of (U) and (S + Stroke), refer to the double clevis drawing on page 19.

Rod End Cap

Flat type/CJ-CF□□□ **Round type/CJ-CR□□□**

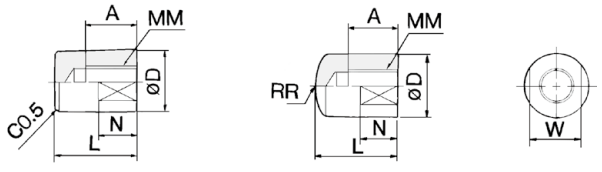

Material: Polyacetal

Part no.		Applicable bore size	A	D	L	MM	N	R	W
Flat type	Round type								
CJ-CF006	CJ-CR006	6	6	8	11	M3 x 0.5	5	8	6
CJ-CF010	CJ-CR010	10	8	10	13	M4 x 0.7	6	10	8
CJ-CF016	CJ-CR016	16	10	12	15	M5 x 0.8	7	12	10

Air Cylinder: Standard Type
Double Acting, Double Rod
Series CJ2W
ø6, ø10, ø16

RoHS

How to Order

CJ2W **B** **16** – **60** **A** **Z** – ☐

With auto switch **CDJ2W** **L** **16** – **60** **A** **Z** – **M9BW** ☐ – **B** – ☐

With auto switch
(Built-in magnet)

Mounting

B	Basic
L	Foot
F	Flange

∗: Foot/Flange brackets are shipped together with the product, but not assembled.

Bore size

6	6 mm
10	10 mm
16	16 mm

Cylinder standard stroke [mm]
Refer to "Standard Strokes" on page 24.

Cushion

Nil	Rubber bumper
A	Air cushion

∗: ø6: Rubber bumper only

Auto switch

Nil	Without auto switch

∗: For applicable auto switches, refer to the table below.
★ Enter the auto switch mounting type (A or B) even when a built-in magnet cylinder without an auto switch is required.

Number of auto switches

Nil	2 pcs.
S	1 pc.
n	"n" pcs.

Auto switch mounting type

A	Rail mounting
B	Band mounting

∗: For rail mounting, screws and nuts for 2 auto switches come with the rail.
∗: Refer to page 107 for auto switch mounting brackets.
∗: ø6: Band mounting only

Made to Order
Refer to page 24 for details.

Applicable Auto Switches/Refer to the **WEB catalog** or the Best Pneumatics No. 2 for further information on auto switches.

Type	Special function	Electrical entry	Indicator light	Wiring (Output)	Load voltage DC	Load voltage AC	Auto switch model: Band mounting Perpendicular	Band mounting In-line	Rail mounting Perpendicular	Rail mounting In-line	Lead wire length [m] 0.5 (Nil)	1 (M)	3 (L)	5 (Z)	None (N)	Pre-wired connector	Applicable load	
Solid state auto switch	—	Grommet	Yes	3-wire (NPN)	5 V,12 V	—	M9NV	M9N	M9NV	M9N	●	●	●	○	—	○	IC circuit	Relay, PLC
				3-wire (PNP)			M9PV	M9P	M9PV	M9P	●	●	●	○	—	○		
				2-wire	12 V		M9BV	M9B	M9BV	M9B	●	●	●	○	—	○	—	
		Connector					—	H7C	J79C	—	●	—	●	●	●	—		
	Diagnostic indication (2-color indicator)	Grommet		3-wire (NPN)	5 V,12 V		M9NWV	M9NW	M9NWV	M9NW	●	●	●	○	—	○	IC circuit	
				3-wire (PNP)			M9PWV	M9PW	M9PWV	M9PW	●	●	●	○	—	○		
				2-wire	12 V		M9BWV	M9BW	M9BWV	M9BW	●	●	●	○	—	○	—	
	Water resistant (2-color indicator)			3-wire (NPN)	5 V,12 V		M9NAV∗1	M9NA∗1	M9NAV∗1	M9NA∗1	○	○	●	○	—	○	IC circuit	
				3-wire (PNP)			M9PAV∗1	M9PA∗1	M9PAV∗1	M9PA∗1	○	○	●	○	—	○		
				2-wire	12 V		M9BAV∗1	M9BA∗1	M9BAV∗1	M9BA∗1	○	○	●	○	—	○	—	
	With diagnostic output (2-color indicator)			4-wire (NPN)	5 V,12 V		—	H7NF	—	F79F	●	—	●	○	—	○	IC circuit	
Reed auto switch	—	Grommet	Yes	3-wire (NPN equivalent)	—	5 V	—	A96V	A96	A96V	A96	●	—	●	—	—	—	IC circuit	—
				2-wire	24 V	—	200 V	—	—	A72	A72H	●	—	●	—	—	—	—	Relay, PLC
						12 V	100 V	A93V∗2	A93	A93V∗2	A93	●	●	●	●	—	—		
			No				100 V or less	A90V	A90	A90V	A90	●	—	●	—	—	—	IC circuit	
			Yes				—	—	C73C	A73C	—	●	—	●	●	●	—	—	
		Connector	No				24 V or less	—	C80C	A80C	—	●	—	●	●	●	—	IC circuit	
	Diagnostic indication (2-color indicator)	Grommet	Yes		—	—	—	—	A79W	—	●	—	●	—	—	—	—	

∗1: Water resistant type auto switches can be mounted on the above models, but in such case SMC cannot guarantee water resistance. Please contact SMC regarding water resistant types with the above model numbers.
∗2: 1 m type lead wire is only applicable to D-A93.
∗: Lead wire length symbols: 0.5 m····· Nil (Example) M9NW
1 m····· M (Example) M9NWM
3 m····· L (Example) M9NWL
5 m····· Z (Example) M9NWZ
None····· N (Example) H7CN

∗: Since there are other applicable auto switches than listed above, refer to page 108 for details.
∗: For details about auto switches with pre-wired connector, refer to the **WEB catalog** or the Best Pneumatics No. 2.
∗: Solid state auto switches marked with "○" are produced upon receipt of order.
∗: The D-A9□□/M9□□□/A7□□/A80□/F7□□/J7□□ auto switches are shipped together, (but not assembled). (For band mounting, only the auto switch mounting brackets are assembled before shipment.)

Symbol

Double acting, Double rod, Rubber bumper

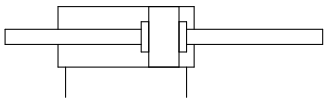

Air cushion

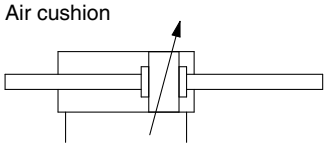

Specifications

Bore size [mm]		6	10	16
Action		Double acting, Double rod		
Fluid		Air		
Proof pressure		1 MPa		
Maximum operating pressure		0.7 MPa		
Minimum operating pressure	Rubber bumper	0.15 MPa	0.1 MPa	
	Air cushion	—	0.1 MPa	
Ambient and fluid temperature		Without auto switch: –10°C to 70°C With auto switch: –10°C to 60°C (No freezing)		
Cushion		Rubber bumper	Rubber bumper/Air cushion	
Lubrication		Not required (Non-lube)		
Piston speed	Rubber bumper	50 to 750 mm/s		
	Air cushion	—	50 to 1000 mm/s	
Allowable kinetic energy	Rubber bumper	0.012 J	0.035 J	0.090 J
	Air cushion (Effective cushion length)	—	0.07 J (9.4 mm)	0.18 J (9.4 mm)
Stroke length tolerance		+1.0 0		

Standard Strokes

[mm]

Bore size	Standard stroke
6	15, 30, 45, 60
10	15, 30, 45, 60, 75, 100, 125, 150
16	15, 30, 45, 60, 75, 100, 125, 150, 175, 200

∗: Manufacture of intermediate strokes in 1 mm increments is possible. (Spacers are not used.) Produced upon receipt of order.
∗: Please consult with SMC for strokes which exceed the standard stroke length.
∗: Applicable strokes should be confirmed according to the usage. For details, refer to "Air Cylinders Model Selection" on front matter pages of the Best Pneumatics No. 2 or the **WEB catalog**. In addition, the products that exceed the standard stroke might not be able to fulfill the specifications due to the deflection etc.

Mounting and Accessories /Refer to page 22 for details about part numbers and dimensions.

●···Mounted on the product. ○···Please order separately.

Mounting		Basic	Foot	Flange
Standard	Mounting nut	●	●	●
	Rod end nut	●	●	●
Option	Single knuckle joint	○	○	○
	Double knuckle joint*	○	○	○
	Rod end cap (Flat/Round type)	○	○	○

∗: A pin and retaining rings are shipped together with double knuckle joint.

Mounting Brackets/Part No.

Mounting bracket	Bore size [mm]		
	6	**10**	**16**
Foot	CJ-L006C	CJ-L010C	CJ-L016C
Flange	CJ-F006C	CJ-F010C	CJ-F016C

Weights

[g]

Bore size [mm]		Rubber bumper			Air cushion	
		6	**10**	**16**	**10**	**16**
Basic weight (When the stroke is zero)	Basic	25	29	56	36	61
Additional weight per 15 mm of stroke		3	4.5	7.5	4.5	7.5
Mounting bracket weight	Foot	16	16	50	16	50
	Flange	5	5	13	5	13
Accessories	Single knuckle joint	—	17	23	17	23
	Double knuckle joint (including knuckle pin)	—	25	21	25	21
	Rod end cap (Flat type)	1	1	2	1	2
	Rod end cap (Round type)	1	1	2	1	2

∗: Mounting nut and rod end nut are included in the basic weight.
Calculation:
Example) **CJ2WL10-45Z**
- Basic weight ····· 29 (ø10)
- Additional weight ····· 4.5/15 stroke
- Cylinder stroke····· 45 stroke
- Mounting bracket weight····· 16 (Foot)

29 + 4.5/15 x 45 + 16 = **58.5 g**

Made to Order

Made to Order
(For details, refer to pages 111 to 120.)

Symbol	Specifications
-XA□	Change of rod end shape
-XB6	Heat resistant cylinder (–10 to 150°C) ∗ Not available with switch & with air cushion
-XB7	Cold resistant cylinder (–40 to 70°C) ∗ Not available with switch & with air cushion
-XC22	Fluororubber seal ∗ Not available with air cushion
-XC51	With hose nipple
-XC85	Grease for food processing equipment
-X446	PTFE grease

Refer to pages 101 to 108 for cylinders with auto switches.

- Auto switch proper mounting position (detection at stroke end) and its mounting height
- Minimum stroke for auto switch mounting
- Operating range
- Auto switch mounting brackets/Part no.

⚠ Precautions

Refer to page 121 before handling.

Moisture Control Tube Series IDK

When operating an actuator with a small diameter and a short stroke at a high frequency, the dew condensation (water droplet) may occur inside the piping depending on the conditions.
Simply connecting the moisture control tube to the actuator will prevent dew condensation from occurring. For details, refer to **the IDK series in the WEB catalog**.

Clean Series

10-CJ2W Mounting 10/16 – Stroke Z

Clean Series

Air cylinder which is applicable for the system which discharges leakage from the rod section directly into the outside of clean room by relief port and making an actuator's rod section having a double seal construction.

For the detailed specifications, refer to the "Pneumatic Clean Series" (**WEB catalog**).

Specifications

Action	Double acting, Double rod
Bore size [mm]	10, 16
Maximum operating pressure	0.7 MPa
Minimum operating pressure	0.1 MPa
Cushion	Rubber bumper
Standard stroke [mm]	Same as standard type. (Refer to page 24.)
Auto switch	Mountable (Band mounting)
Mounting	Basic, Foot, Flange

Construction (Not able to disassemble)

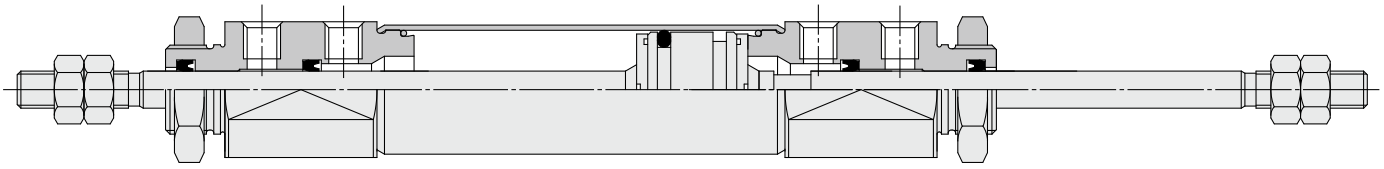

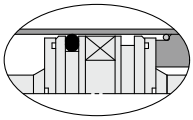

With auto switch

Construction (Not able to disassemble)

ø6
Rubber bumper

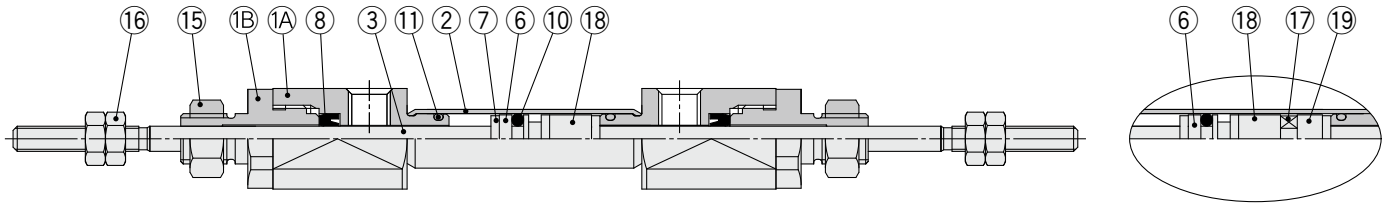

ø10, ø16
Rubber bumper

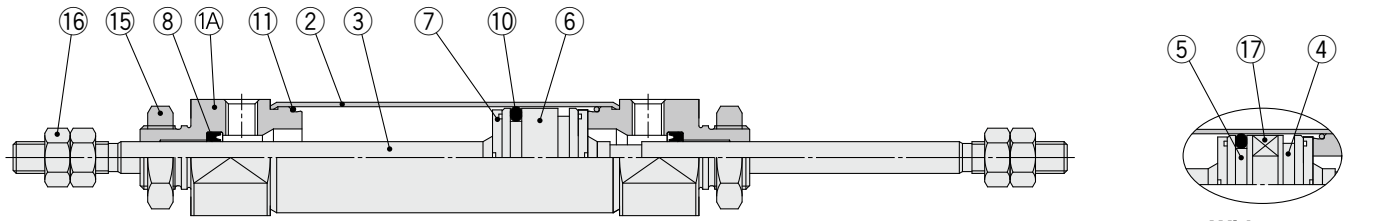

ø10, ø16
Air cushion

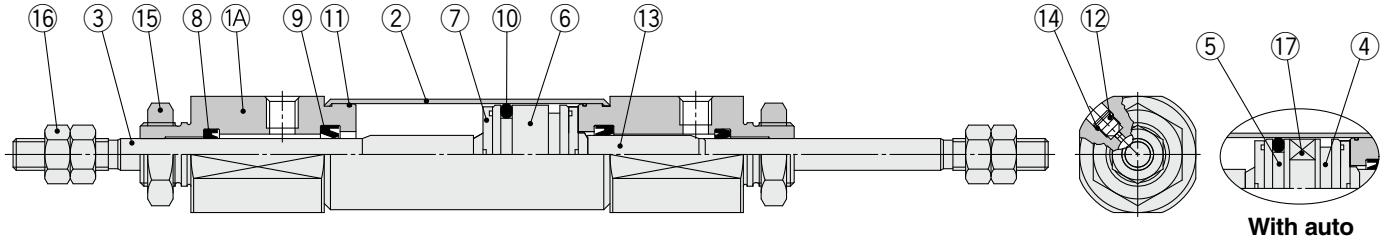

Component Parts

No.	Description	Material	Note
1A	**Rod cover**	Aluminum alloy	
1B	**Seal retainer**	Aluminum alloy	ø6 only
2	**Cylinder tube**	Stainless steel	
3	**Piston rod**	Stainless steel	
4	**Piston A**	Aluminum alloy	
5	**Piston B**	Aluminum alloy	
6	**Piston**	Aluminum alloy	
7	**Bumper**	Urethane	
8	**Rod seal**	NBR	
9	**Cushion seal**	NBR	

No.	Description	Material	Note
10	**Piston seal**	NBR	
11	**Tube gasket**	NBR	
12	**Cushion needle**	Carbon steel	
13	**Cushion ring**	Aluminum alloy	
14	**Needle seal**	NBR	
15	**Mounting nut**	Rolled steel	
16	**Rod end nut**	Rolled steel	
17	**Magnet**	—	
18	**Spacer A**	Aluminum alloy	ø6 only
19	**Spacer B**	Aluminum alloy	ø6 only

Basic (B)

CJ2WB6 – Stroke Z

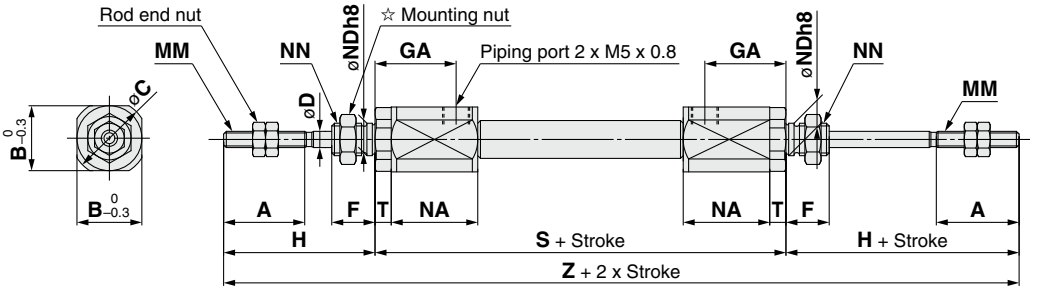

CJ2WB 10 16 – Stroke Z

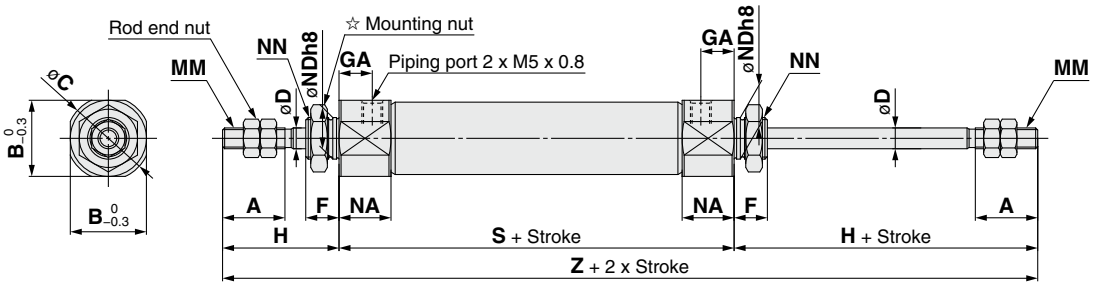

With air cushion: CJ2WB 10 16 – Stroke AZ

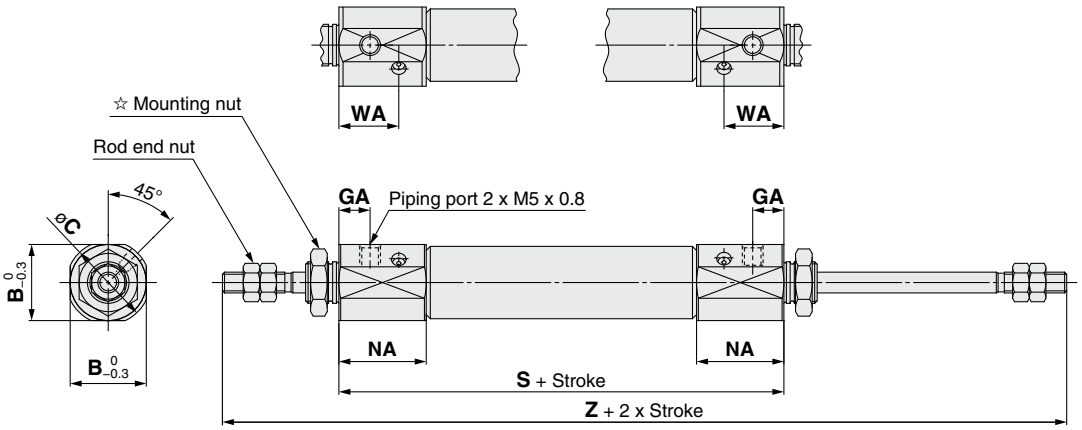

☆ For details of the mounting nut, refer to page 22.

[mm]

Bore size	A	B	C	D	F	GA	H	MM	NA	NDh8	NN	S	T	Z
6	15	12	14	3	8	14.5	28	M3 x 0.5	16	$6^{0}_{-0.018}$	M6 x 1.0	61 (66)	3	117 (122)
10	15	12	14	4	8	8	28	M4 x 0.7	12.5	$8^{0}_{-0.022}$	M8 x 1.0	49	—	105
16	15	18.3	20	5	8	8	28	M5 x 0.8	12.5	$10^{0}_{-0.022}$	M10 x 1.0	50	—	106

With Air Cushion/Dimensions other than the table below are the same as the table above.

∗: ( ) in S and Z dimensions: With auto switch

Bore size	B	C	GA	NA	WA	S	Z
10	15	17	7.5	21	14.4	66	122
16	18.3	20	7.5	21	14.4	67	123

Foot (L)

CJ2WL6 – Stroke Z

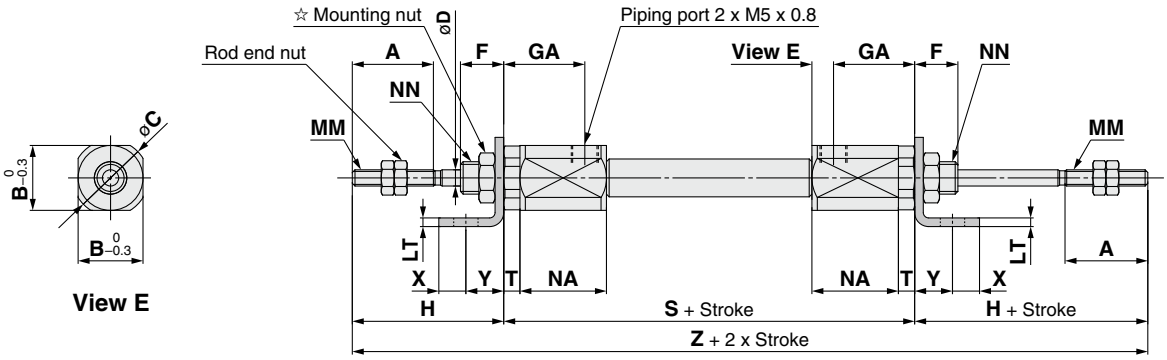

CJ2WL 10 16 – Stroke Z

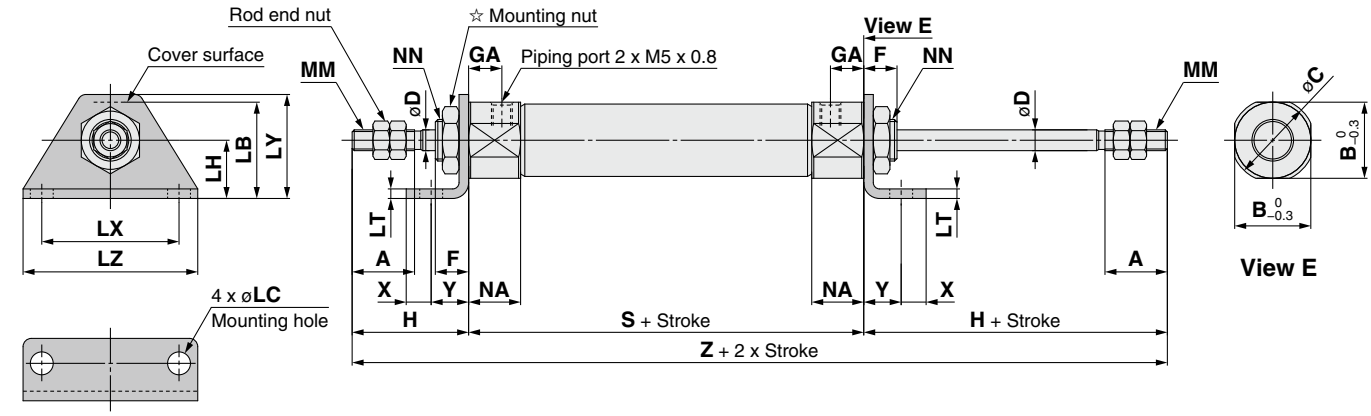

With air cushion: CJ2WL 10 16 – Stroke AZ

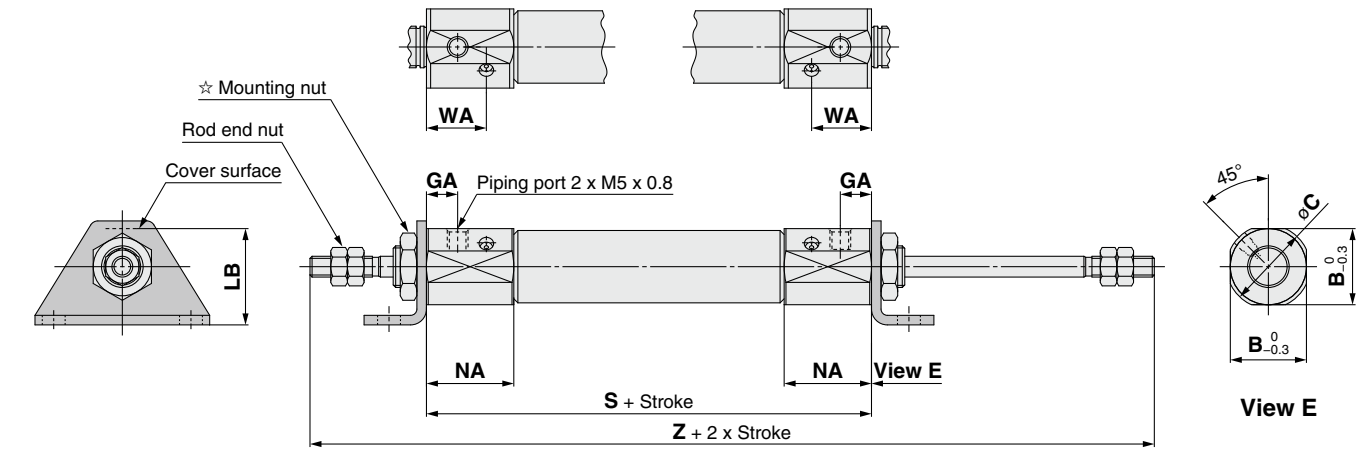

☆ For details of the mounting nut, refer to page 22.

[mm]

Bore size	A	B	C	D	F	GA	H	LB	LC	LH	LT	LX	LY	LZ	MM	NA	NN	S	T	X	Y	Z
6	15	12	14	3	8	14.5	28	15	4.5	9	1.6	24	16.5	32	M3 x 0.5	16	M6 x 1.0	61 (66)	3	5	7	117 (122)
10	15	12	14	4	8	8	28	15	4.5	9	1.6	24	16.5	32	M4 x 0.7	12.5	M8 x 1.0	49	—	5	7	105
16	15	18.3	20	5	8	8	28	23	5.5	14	2.3	33	25	42	M5 x 0.8	12.5	M10 x 1.0	50	—	6	9	106

With Air Cushion/Dimensions other than the table below are the same as the table above.

Bore size	B	C	GA	LB	NA	WA	S	Z
10	15	17	7.5	16.5	21	14.4	66	122
16	18.3	20	7.5	23	21	14.4	67	123

∗: ( ) in S and Z dimensions: With auto switch

Flange (F)

CJ2WF6 – Stroke Z

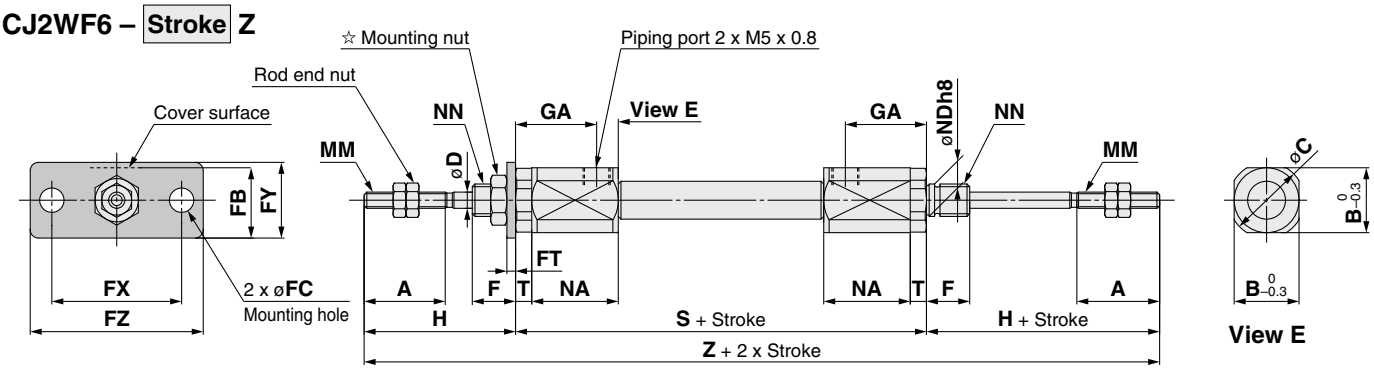

CJ2WF 10 16 – Stroke Z

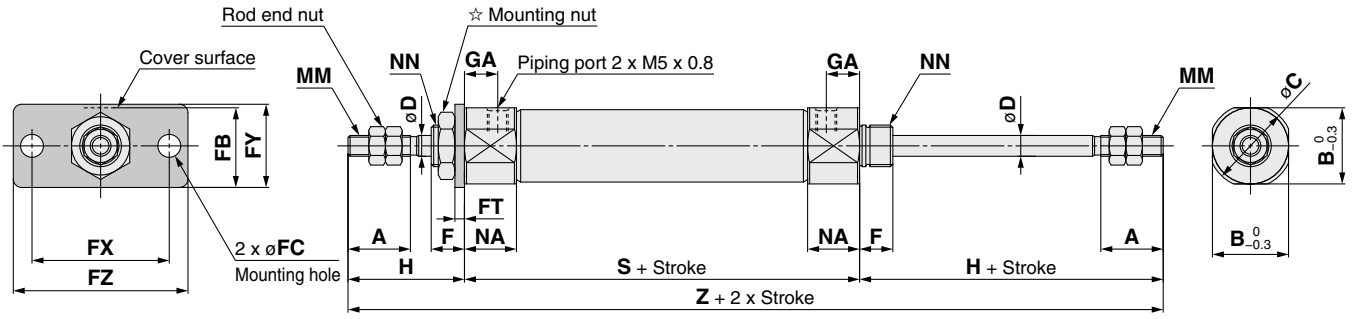

With air cushion: CJ2WF 10 16 – Stroke AZ

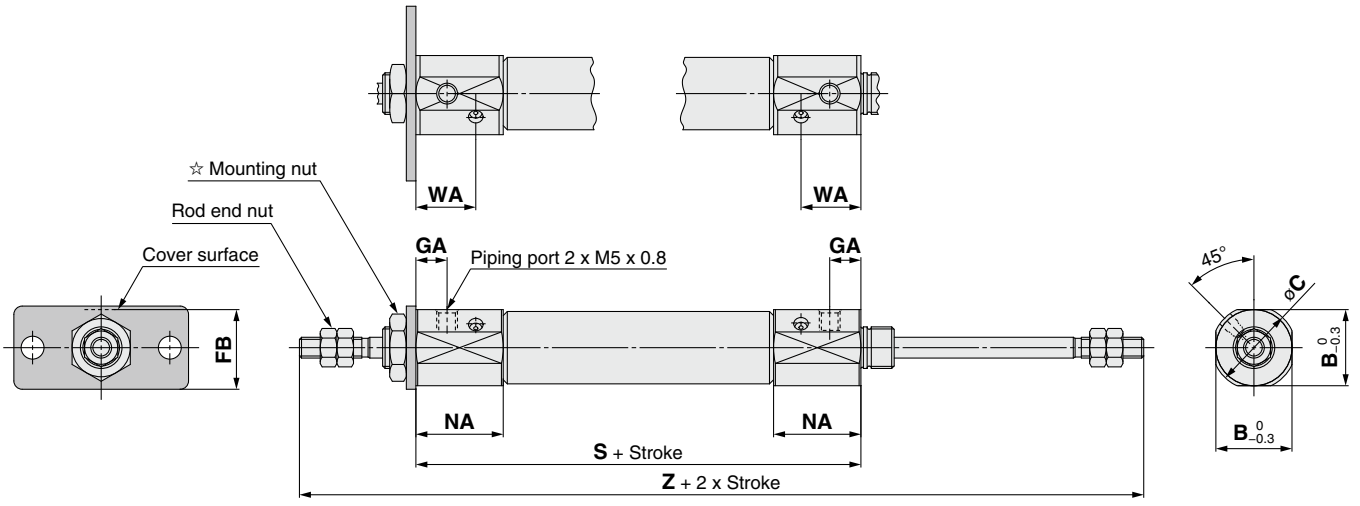

☆ For details of the mounting nut, refer to page 22.

[mm]

Bore size	A	B	C	D	F	FB	FC	FT	FX	FY	FZ	GA	H	MM	NA	NN	S	T	Z
6	15	12	14	3	8	13	4.5	1.6	24	14	32	14.5	28	M3 x 0.5	16	M6 x 1.0	61 (66)	3	117 (122)
10	15	12	14	4	8	13	4.5	1.6	24	14	32	8	28	M4 x 0.7	12.5	M8 x 1.0	49	—	105
16	15	18.3	20	5	8	19	5.5	2.3	33	20	42	8	28	M5 x 0.8	12.5	M10 x 1.0	50	—	106

∗: ( ) in S and Z dimensions: With auto switch

With Air Cushion/Dimensions other than the table below are the same as the table above.

Bore size	B	C	GA	FB	NA	WA	S	Z
10	15	17	7.5	14.5	21	14.4	66	122
16	18.3	20	7.5	19	21	14.4	67	123

Air Cylinder: Standard Type
Single Acting, Spring Return/Extend

Series CJ2
ø6, ø10, ø16

RoHS

How to Order

Cylinder standard stroke [mm]
Refer to "Standard Strokes" on page 31.

Action

S	Single acting, Spring return
T	Single acting, Spring extend

CJ2 B 16 – 45 S Z – – – –

With auto switch **CDJ2 B 16 – 45 S Z – – – M9BW – B –**

With auto switch (Built-in magnet)

Mounting

B	Basic
E	Double-side bossed
D	Double clevis
L	Single foot
M	Double foot
F	Rod flange
G	Head flange

∗: Foot/Flange brackets are shipped together with the product, but not assembled.
∗: Double clevis is only available for ø10 and ø16.

Bore size

6	6 mm
10	10 mm
16	16 mm

Pivot bracket

Nil	None
N	Pivot bracket is shipped together with the product, but not assembled.

∗: Only for CJ2D (double clevis)
∗: Pivot bracket is shipped together with the product, but not assembled.
∗: Except ø6

Rod end bracket

Nil	None
V	Single knuckle joint
W	Double knuckle joint
T	Rod end cap (Flat type)
U	Rod end cap (Round type)

∗: Rod end bracket is shipped together with the product, but not assembled.
∗: A knuckle joint pin is not provided with the single knuckle joint.
∗: ø6: Except knuckle joint

Auto switch

Nil	Without auto switch

∗: For applicable auto switches, refer to the table below.
★ Enter the auto switch mounting type (A or B) even when a built-in magnet cylinder without an auto switch is required.

Auto switch mounting type

A	Rail mounting
B	Band mounting

∗: For rail mounting, screws and nuts for 2 auto switches come with the rail.
∗: Refer to page 107 for auto switch mounting brackets.
∗: ø6: Band mounting only

Number of auto switches

Nil	2 pcs.
S	1 pc.
n	"n" pcs.

Made to Order
Refer to page 31 for details.

Head cover port location

Nil	Perpendicular to axis	
R	Axial	

∗: For double clevis, the product is perpendicular to the cylinder axis.
∗: For double-side bossed, the product is perpendicular to the cylinder axis.
∗: Not applicable to single acting, spring extend (T).

∗: **Refer to "Ordering Example of Cylinder Assembly" on page 31.**

Applicable Auto Switches/Refer to the **WEB catalog** or the Best Pneumatics No. 2 for further information on auto switches.

Type	Special function	Electrical entry	Indicator light	Wiring (Output)	Load voltage DC	Load voltage AC	Auto switch model: Band mounting Perpendicular	Band mounting In-line	Rail mounting Perpendicular	Rail mounting In-line	Lead wire length [m] 0.5 (Nil)	1 (M)	3 (L)	5 (Z)	None (N)	Pre-wired connector	Applicable load	
Solid state auto switch	——	Grommet	Yes	3-wire (NPN)	5 V,12 V	—	M9NV	M9N	M9NV	M9N	●	●	●	○	—	○	IC circuit	Relay, PLC
				3-wire (PNP)			M9PV	M9P	M9PV	M9P	●	●	●	○	—	○		
				2-wire	12 V		M9BV	M9B	M9BV	M9B	●	●	●	○	—	○	—	
		Connector					—	H7C	J79C	—	●	—	●	●	●	—		
	Diagnostic indication (2-color indicator)	Grommet		3-wire (NPN)	5 V,12 V		M9NWV	M9NW	M9NWV	M9NW	●	●	●	○	—	○	IC circuit	
				3-wire (PNP)			M9PWV	M9PW	M9PWV	M9PW	●	●	●	○	—	○		
				2-wire	12 V		M9BWV	M9BW	M9BWV	M9BW	●	●	●	○	—	○	—	
	Water resistant (2-color indicator)			3-wire (NPN)	5 V,12 V		M9NAV∗1	M9NA∗1	M9NAV∗1	M9NA∗1	○	○	●	○	—	○	IC circuit	
				3-wire (PNP)			M9PAV∗1	M9PA∗1	M9PAV∗1	M9PA∗1	○	○	●	○	—	○		
				2-wire	12 V		M9BAV∗1	M9BA∗1	M9BAV∗1	M9BA∗1	○	○	●	○	—	○	—	
	With diagnostic output (2-color indicator)			4-wire (NPN)	5 V,12 V		—	H7NF	—	F79F	●	—	●	○	—	○	IC circuit	
Reed auto switch	——	Grommet	Yes	3-wire (NPN equivalent)	—	5 V	—	A96V	A96	A96V	A96	●	—	●	—	—	—	IC circuit	—
				2-wire		—	200 V	—	—	A72	A72H	●	—	●	—	—	—	—	Relay, PLC
			No		24 V	12 V	100 V	A93V∗2	A93	A93V∗2	A93	●	●	●	●	—	—		
							100 V or less	A90V	A90	A90V	A90	●	—	●	—	—	—	IC circuit	
		Connector	Yes				—	—	C73C	A73C	—	●	—	●	●	●	—	—	
			No				24 V or less	—	C80C	A80C	—	●	—	●	●	●	—	IC circuit	
	Diagnostic indication (2-color indicator)	Grommet	Yes		—	—	—	—	—	A79W	—	●	—	●	—	—	—	—	

∗1: Water resistant type auto switches can be mounted on the above models, but in such case SMC cannot guarantee water resistance. Please contact SMC regarding water resistant types with the above model numbers.
∗2: 1 m type lead wire is only applicable to D-A93.

∗: Lead wire length symbols: 0.5 m····· Nil (Example) M9NW
1 m····· M (Example) M9NWM
3 m····· L (Example) M9NWL
5 m····· Z (Example) M9NWZ
None····· N (Example) H7CN

∗: Since there are other applicable auto switches than listed, refer to page 108 for details.
∗: For details about auto switches with pre-wired connector, refer to the **WEB catalog** or the Best Pneumatics No. 2.
∗: Solid state auto switches marked with "○" are produced upon receipt of order.
∗: The D-A9□□/M9□□□/A7□□/A80□/F7□□/J7□□ auto switches are shipped together, (but not assembled). (For band mounting, only auto switch mounting brackets are assembled before being shipped.)

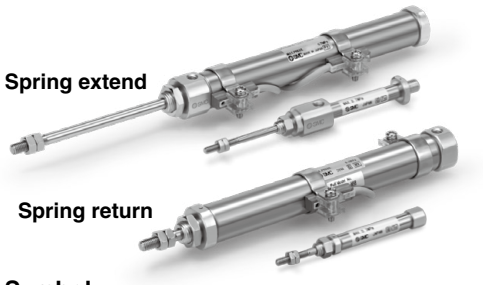

Symbol

Single acting, Spring return, Rubber bumper

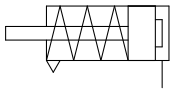

Single acting, Spring extend, Rubber bumper

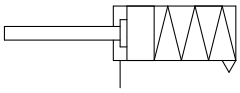

Made to Order

(For details, refer to pages 111 to 120.)

Symbol	Specifications
-XA□	Change of rod end shape
-XC22	Fluororubber seal
-XC51	With hose nipple
-XC85	Grease for food processing equipment
-X446	PTFE grease
-X773∗1	Short pitch mounting/Single acting, spring return

∗1: ø6 only

Refer to pages 101 to 108 for cylinders with auto switches.

- Auto switch proper mounting position (detection at stroke end) and its mounting height
- Minimum stroke for auto switch mounting
- Operating range
- Auto switch mounting brackets/Part no.

⚠ Precautions

Refer to page 121 before handling.

Ordering Example of Cylinder Assembly

Cylinder model: CDJ2D16-45SZ-NW-M9BW-B

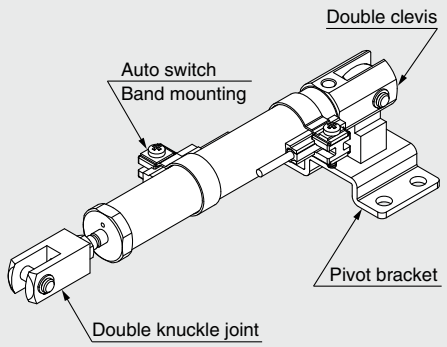

Mounting D: Double clevis
Pivot bracket N: Yes
Rod end bracket W: Double knuckle joint
Auto switch D-M9BW: 2 pcs.
Auto switch mounting B: Band mounting

∗: Pivot bracket, double knuckle joint and auto switch are shipped together with the product, but not assembled.

Specifications

Bore size [mm]		6	10	16
Action		Single acting, Spring return/Single acting, Spring extend		
Fluid		Air		
Proof pressure		1 MPa		
Maximum operating pressure		0.7 MPa		
Minimum operating pressure	Spring return	0.2 MPa	0.15 MPa	
	Spring extend	0.25 MPa	0.15 MPa	
Ambient and fluid temperature		Without auto switch: –10°C to 70°C With auto switch: –10°C to 60°C (No freezing)		
Cushion		Rubber bumper		
Lubrication		Not required (Non-lube)		
Stroke length tolerance		$^{+1.0}_{0}$		
Piston speed		50 to 750 mm/s		
Allowable kinetic energy		0.012 J	0.035 J	0.090 J

Standard Strokes

[mm]

Bore size	Standard stroke
6	15, 30, 45, 60
10	15, 30, 45, 60
16	15, 30, 45, 60, 75, 100, 125, 150

∗: Manufacture of intermediate strokes in 1 mm increments is possible. (Spacers are not used.)
∗: Please consult with SMC for strokes which exceed the standard stroke length.
∗: Applicable strokes should be confirmed according to the usage. For details, refer to "Air Cylinders Model Selection" on front matter pages of the Best Pneumatics No. 2 or the **WEB catalog**. In addition, the products that exceed the standard stroke might not be able to fulfill the specifications due to the deflection etc.

Spring Reaction Force

Bore size [mm]	Spring reaction force [N]	
	Primary	Secondary
6	1.77	3.72
10	3.53	6.86
16	6.86	14.2

Spring with primary mounting load

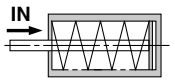

When the spring is set in the cylinder

Spring with secondary mounting load

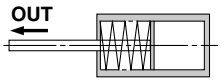

When the spring is contracted by applying air

Mounting Brackets/Part No.

Mounting bracket	Bore size [mm]		
	6	10	16
Foot	CJ-L006C	CJ-L010C	CJ-L016C
Flange	CJ-F006C	CJ-F010C	CJ-F016C
T-bracket∗1	—	CJ-T010C	CJ-T016C

∗1: T-bracket is used with double clevis (D).

Mounting and Accessories

/Refer to page 22 for details about part numbers and dimensions.

●···Mounted on the product. ○···Can be ordered within the cylinder model.

Mounting		Basic	Foot	Flange	Double∗ clevis	Double clevis (including T-bracket)
Standard	Mounting nut	●	●	●	—	—
	Rod end nut	●	●	●	●	●
	Clevis pin	—	—	—	●	●
Option	Single knuckle joint	○	○	○	○	○
	Double knuckle joint∗	○	○	○	○	○
	Rod end cap (Flat/Round type)	○	○	○	○	○
	T-bracket	—	—	—	○	●

∗: A pin and retaining rings are shipped together with double clevis and double knuckle joint.
∗: Double clevis is only available for ø10 and ø16.

Theoretical Output

Refer to the "Single acting, Spring return cylinder" in Theoretical Output 1 of Technical data 3 in Best Pneumatics No. 2. In the case of the spring extend type, the force at OUT side will be the ending force of the spring return, and that at the IN side will be the amount of the IN side force of the double acting type cylinder from which the beginning force of the spring return has been subtracted.

Moisture Control Tube Series IDK

When operating an actuator with a small diameter and a short stroke at a high frequency, the dew condensation (water droplet) may occur inside the piping depending on the conditions.
Simply connecting the moisture control tube to the actuator will prevent dew condensation from occurring. For details, refer to **the IDK series in the WEB catalog**.

Weights

Spring Return

[g]

Bore size [mm]		6			10				16			
Mounting		Basic	Axial piping	Head-side bossed	Basic	Axial piping	Double clevis (including clevis pin)	Head-side bossed	Basic	Axial piping	Double clevis (including clevis pin)	Head-side bossed
Basic weight	15 stroke	17	15	18	28	28	29	28	62	62	69	64
	30 stroke	20	18	21	35	35	35	35	77	77	84	79
	45 stroke	23	21	23	44	44	45	45	95	95	102	97
	60 stroke	26	24	27	54	54	55	54	113	113	119	115
	75 stroke								134	134	141	136
	100 stroke								167	167	174	169
	125 stroke								204	204	212	206
	150 stroke								227	227	234	229
Mounting bracket weight	Single foot	8	8	8	8				25			
	Double foot	16	16	16	16				50			
	Rod flange	5	5	5	5				13			
	Head flange	5	5	5	5				13			
Accessories	Single knuckle joint	—	—	—	17				23			
	Double knuckle joint (including knuckle pin)	—	—	—	25				21			
	Rod end cap (Flat type)	1	1	1	1				2			
	Rod end cap (Round type)	1	1	1	1				2			
	T-bracket	—	—	—	32				50			

∗: Mounting nut and rod end nut are included in the basic weight.
∗: Mounting nut is not attached to the double clevis, so the mounting nut weight is already subtracted.
Calculation:
Example) **CJ2L10-45SZ**
- Basic weight ····· 44 (ø10-45 stroke)
- Mounting bracket weight····· 8 (Single foot)

44 + 8 = **52 g**

Spring Extend

[g]

Bore size [mm]		6		10				16			
Mounting		Basic	Head-side bossed	Basic	Axial piping	Double clevis (including clevis pin)	Head-side bossed	Basic	Axial piping	Double clevis (including clevis pin)	Head-side bossed
Basic weight	15 stroke	18	19	28	28	30	29	63	63	71	67
	30 stroke	21	22	34	34	36	35	77	77	85	80
	45 stroke	24	24	42	42	44	43	93	93	100	96
	60 stroke	27	28	51	51	52	51	109	109	116	112
	75 stroke							129	129	137	133
	100 stroke							159	159	166	162
	125 stroke							193	193	201	196
	150 stroke							213	213	221	217
Mounting bracket weight	Single foot	8	8	8				25			
	Double foot	16	16	16				50			
	Rod flange	5	5	5				13			
	Head flange	5	5	5				13			
Accessories	Single knuckle joint	—	—	17				23			
	Double knuckle joint (including knuckle pin)	—	—	25				21			
	Rod end cap (Flat type)	1	1	1				2			
	Rod end cap (Round type)	1	1	1				2			
	T-bracket	—	—	32				50			

∗: Mounting nut and rod end nut are included in the basic weight.
∗: Mounting nut is not attached to the double clevis, so the mounting nut weight is already subtracted.
Calculation:
Example) **CJ2L10-45TZ**
- Basic weight ····· 42 (ø10-45 stroke)
- Mounting bracket weight····· 8 (Single foot)

42 + 8 = **50 g**

Construction (Not able to disassemble)

Single acting, Spring return

ø6

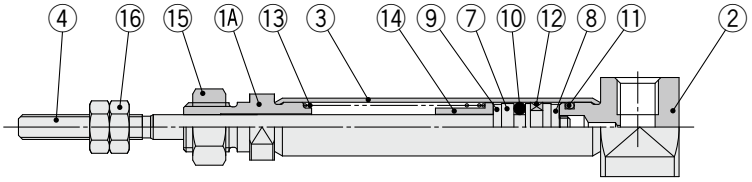

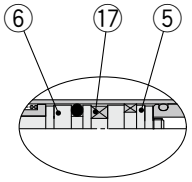

With auto switch

ø10, ø16

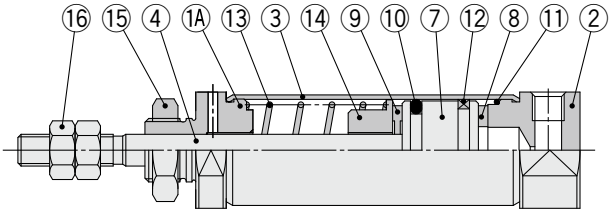

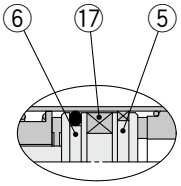

With auto switch

Single acting, Spring extend

ø6

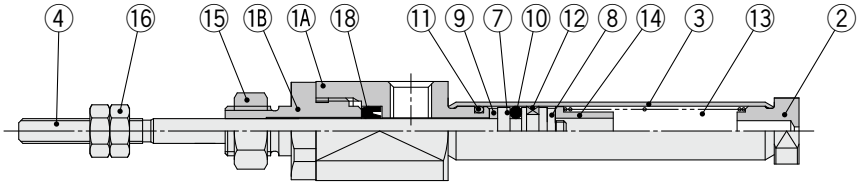

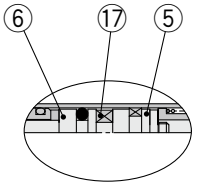

With auto switch

ø10, ø16

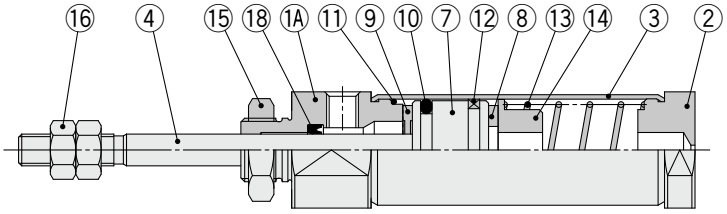

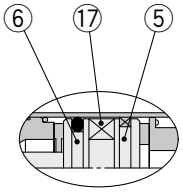

With auto switch

Component Parts

No.	Description	Material	Note
1A	**Rod cover**	Aluminum alloy	
1B	**Seal retainer**	Aluminum alloy	ø6 only
2	**Head cover**	Aluminum alloy	
3	**Cylinder tube**	Stainless steel	
4	**Piston rod**	Stainless steel	
5	**Piston A**	Aluminum alloy	
6	**Piston B**	Aluminum alloy	
7	**Piston**	Aluminum alloy	
8	**Bumper A**	Urethane	
9	**Bumper B**	Urethane	

No.	Description	Material	Note
10	**Piston seal**	NBR	
11	**Tube gasket**	NBR	
12	**Wear ring**	Resin	
13	**Return spring**	Piano wire	
14	**Spring seat**	Aluminum alloy	
15	**Mounting nut**	Rolled steel	
16	**Rod end nut**	Rolled steel	
17	**Magnet**	—	
18	**Rod seal**	NBR	

Single Acting, Spring Return: Basic (B)

CJ2B6 – Stroke S Head cover port location Z

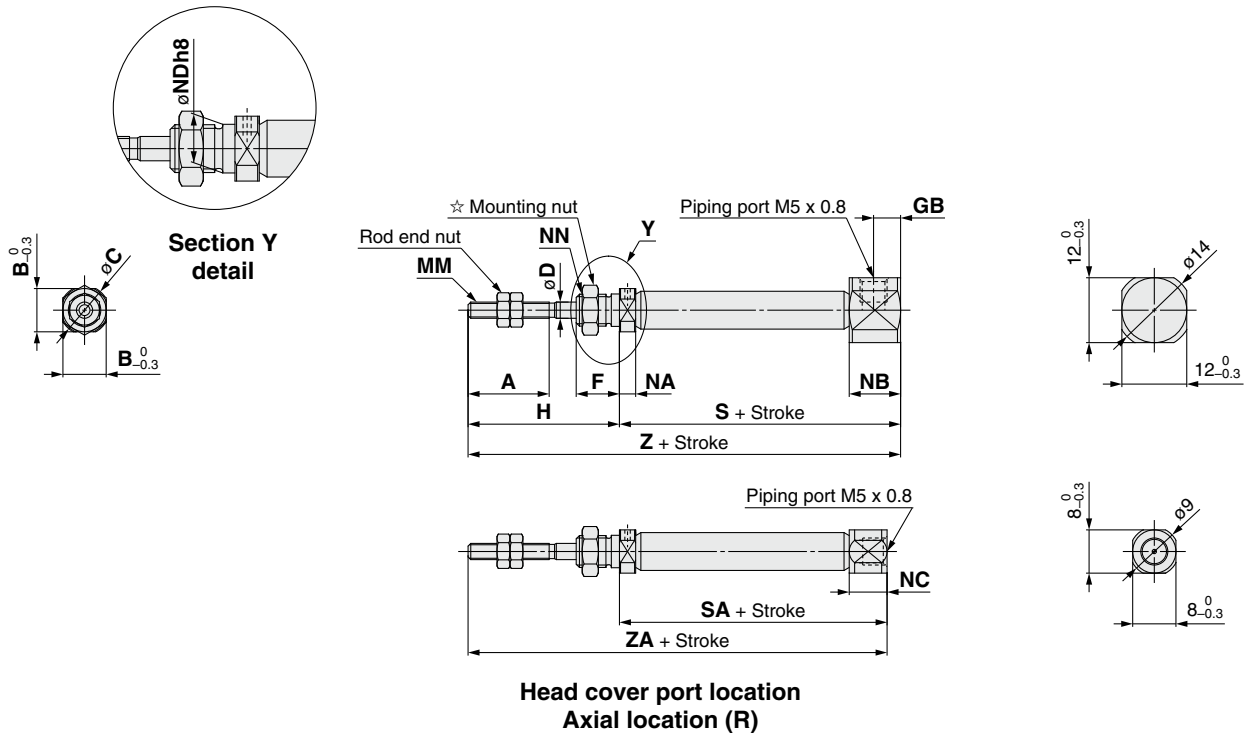

Head cover port location
Axial location (R)

CJ2B 10 16 – Stroke S Head cover port location Z

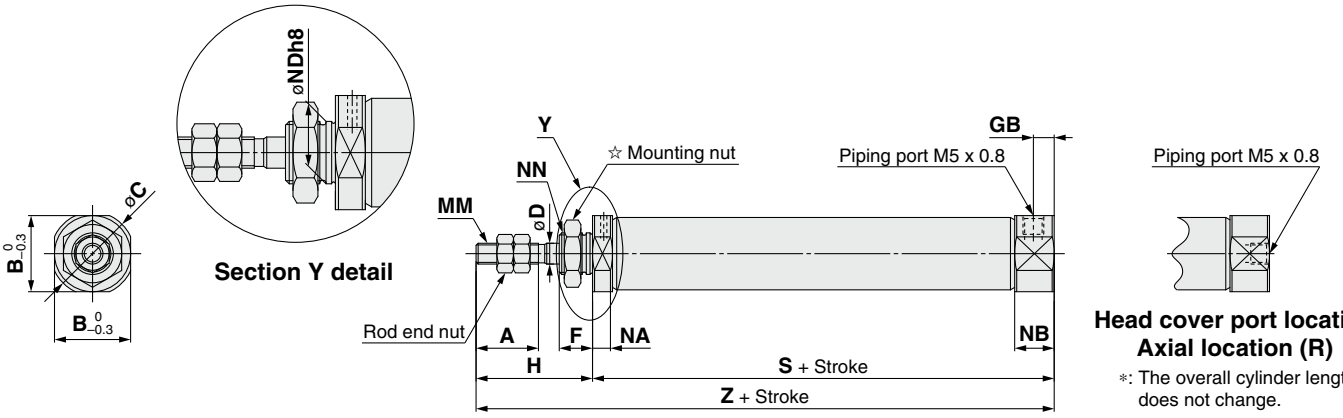

Head cover port location
Axial location (R)

∗: The overall cylinder length does not change.

☆ For details of the mounting nut, refer to page 22.

[mm]

Bore size	A	B	C	D	F	GB	H	MM	NA	NB	NC	NDh8	NN	S							
														5 to 15 st	16 to 30 st	31 to 45 st	46 to 60 st	61 to 75 st	76 to 100 st	101 to 125 st	126 to 150 st
6	15	8	9	3	8	5	28	M3 x 0.5	3	9.5	7	6 0 −0.018	M6 x 1.0	37 (42)	46 (51)	50 (55)	64 (69)	—	—	—	—
10	15	12	14	4	8	5	28	M4 x 0.7	4.8	9.5	—	8 0 −0.022	M8 x 1.0	45.5	53	65	77	—	—	—	—
16	15	18.3	20	5	8	5	28	M5 x 0.8	4.8	9.5	—	10 0 −0.022	M10 x 1.0	45.5	54	66	78	84	108	126	138

Bore size	SA								Z								ZA							
	5 to 15 st	16 to 30 st	31 to 45 st	46 to 60 st	61 to 75 st	76 to 100 st	101 to 125 st	126 to 150 st	5 to 15 st	16 to 30 st	31 to 45 st	46 to 60 st	61 to 75 st	76 to 100 st	101 to 125 st	126 to 150 st	5 to 15 st	16 to 30 st	31 to 45 st	46 to 60 st	61 to 75 st	76 to 100 st	101 to 125 st	126 to 150 st
6	34.5 (39.5)	43.5 (48.5)	47.5 (52.5)	61.5 (66.5)	—	—	—	—	65 (70)	74 (79)	78 (83)	92 (97)	—	—	—	—	62.5 (67.5)	71.5 (76.5)	75.5 (80.5)	89.5 (94.5)	—	—	—	—
10	—	—	—	—	—	—	—	—	73.5	81	93	105	—	—	—	—	—	—	—	—	—	—	—	—
16	—	—	—	—	—	—	—	—	73.5	82	94	106	112	136	154	166	—	—	—	—	—	—	—	—

∗: ( ) in S, SA, Z and ZA dimensions: With auto switch

Single Acting, Spring Return: Double-side Bossed (E)

CJ2E6 – Stroke SZ

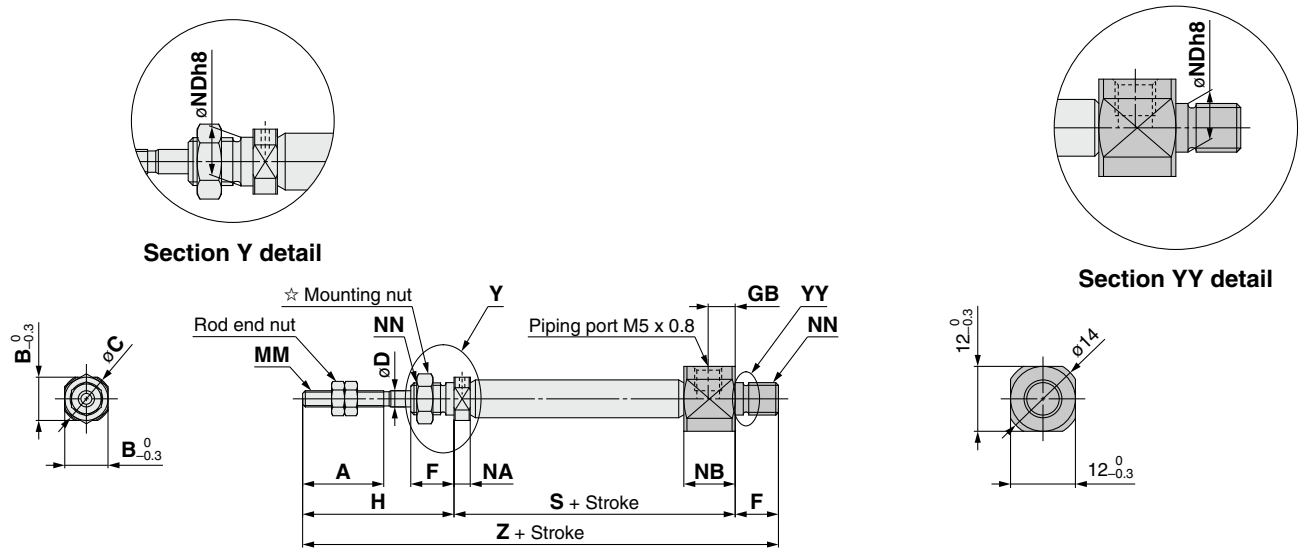

CJ2E 10 16 – Stroke SZ

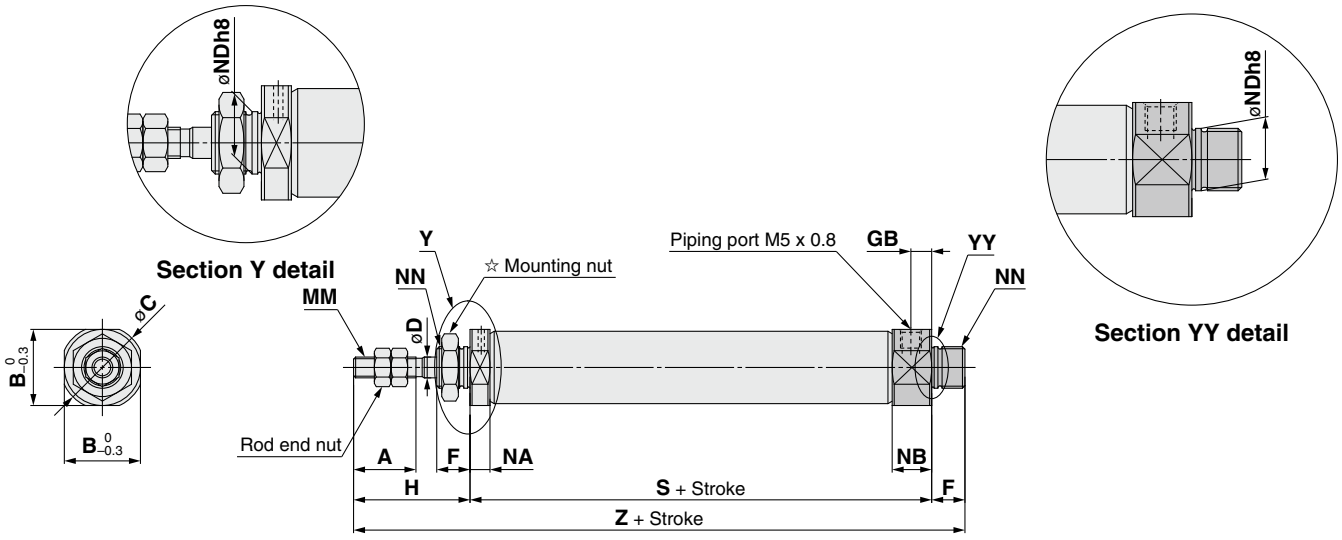

☆ For details of the mounting nut, refer to page 22.

[mm]

Bore size	A	B	C	D	F	GB	H	MM	NA	NB	NDh8	NN	S								Z							
													5 to 15 st	16 to 30 st	31 to 45 st	46 to 60 st	61 to 75 st	76 to 100 st	101 to 125 st	126 to 150 st	5 to 15 st	16 to 30 st	31 to 45 st	46 to 60 st	61 to 75 st	76 to 100 st	101 to 125 st	126 to 150 st
6	15	8	9	3	8	5	28	M3 x 0.5	3	9.5	$6^{0}_{-0.018}$	M6 x 1.0	37 (42)	46 (51)	50 (55)	64 (69)	—	—	—	—	73 (78)	82 (87)	86 (91)	100 (105)	—	—	—	—
10	15	12	14	4	8	5	28	M4 x 0.7	4.8	9.5	$8^{0}_{-0.022}$	M8 x 1.0	45.5	53	65	77	—	—	—	—	73.5	81	93	105	—	—	—	—
16	15	18.3	20	5	8	5	28	M5 x 0.8	4.8	9.5	$10^{0}_{-0.022}$	M10 x 1.0	45.5	54	66	78	84	108	126	138	73.5	82	94	106	112	136	154	166

∗: ( ) in S and Z dimensions: With auto switch

Single Acting, Spring Return: Single Foot (L)

CJ2L6 – Stroke S Head cover port location Z

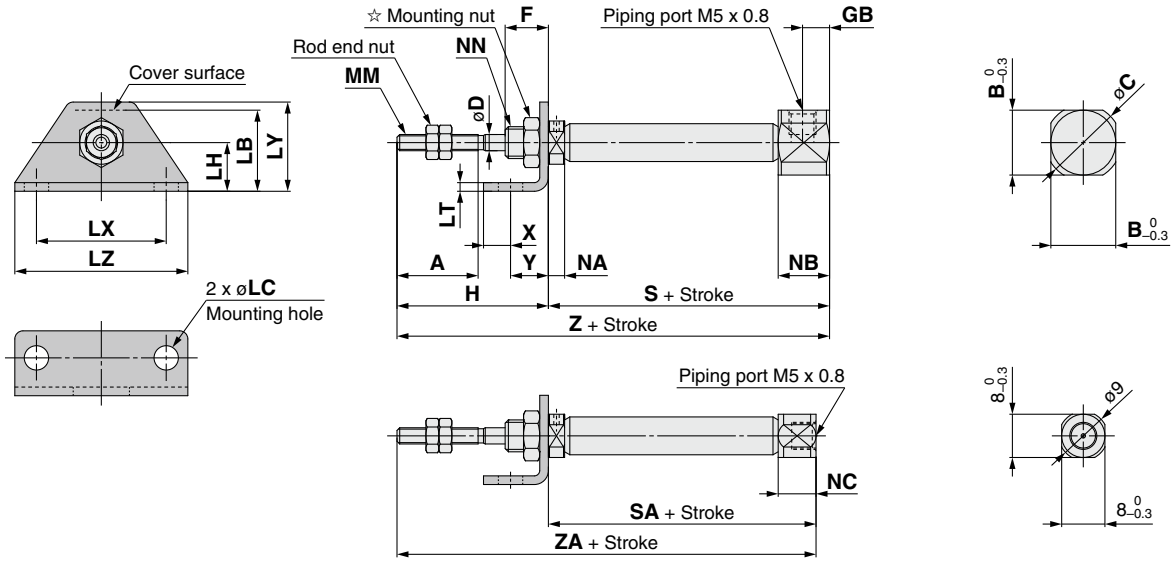

Head cover port location
Axial location (R)

CJ2L 10 16 – Stroke S Head cover port location Z

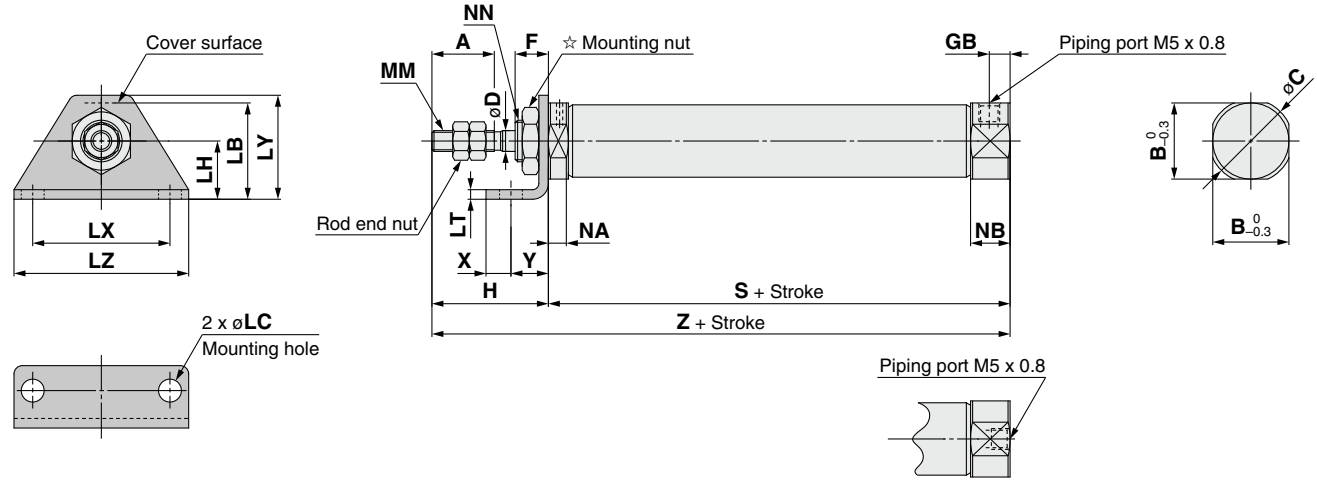

Head cover port location
Axial location (R)

∗: The overall cylinder length does not change.

☆ For details of the mounting nut, refer to page 22.

[mm]

Bore size	A	B	C	D	F	GB	H	LB	LC	LH	LT	LX	LY	LZ	MM	NA	NB	NN	S							
																			5 to 15 st	16 to 30 st	31 to 45 st	46 to 60 st	61 to 75 st	76 to 100 st	101 to 125 st	126 to 150 st
6	15	12	14	3	8	5	28	13	4.5	9	1.6	24	16.5	32	M3 x 0.5	3	9.5	M6 x 1.0	37 (42)	46 (51)	50 (55)	64 (69)	—	—	—	—
10	15	12	14	4	8	5	28	15	4.5	9	1.6	24	16.5	32	M4 x 0.7	4.8	9.5	M8 x 1.0	45.5	53	65	77	—	—	—	—
16	15	18.3	20	5	8	5	28	23	5.5	14	2.3	33	25	42	M5 x 0.8	4.8	9.5	M10 x 1.0	45.5	54	66	78	84	108	126	138

Bore size	SA								X	Y	Z								ZA							
	5 to 15 st	16 to 30 st	31 to 45 st	46 to 60 st	61 to 75 st	76 to 100 st	101 to 125 st	126 to 150 st			5 to 15 st	16 to 30 st	31 to 45 st	46 to 60 st	61 to 75 st	76 to 100 st	101 to 125 st	126 to 150 st	5 to 15 st	16 to 30 st	31 to 45 st	46 to 60 st	61 to 75 st	76 to 100 st	101 to 125 st	126 to 150 st
6	34.5 (39.5)	43.5 (48.5)	47.5 (52.5)	61.5 (66.5)	—	—	—	—	5	7	65 (70)	74 (79)	78 (83)	92 (97)	—	—	—	—	62.5 (67.5)	71.5 (76.5)	75.5 (80.5)	89.5 (94.5)	—	—	—	—
10	—	—	—	—	—	—	—	—	5	7	73.5	81	93	105	—	—	—	—	—	—	—	—	—	—	—	—
16	—	—	—	—	—	—	—	—	6	9	73.5	82	94	106	112	136	154	166	—	—	—	—	—	—	—	—

∗: ( ) in S, SA, Z and ZA dimensions: With auto switch

Single Acting, Spring Return: Double Foot (M)

CJ2M6 – Stroke SZ

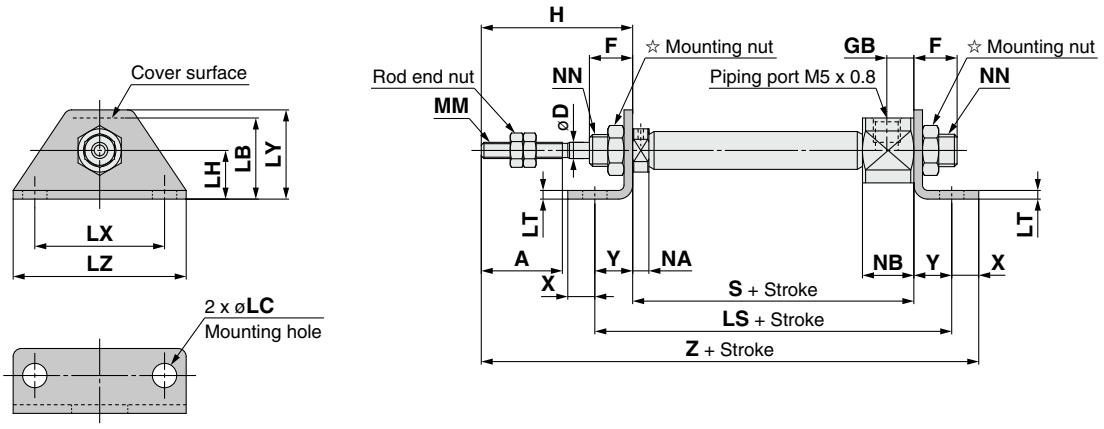

CJ2M 10 16 – Stroke SZ

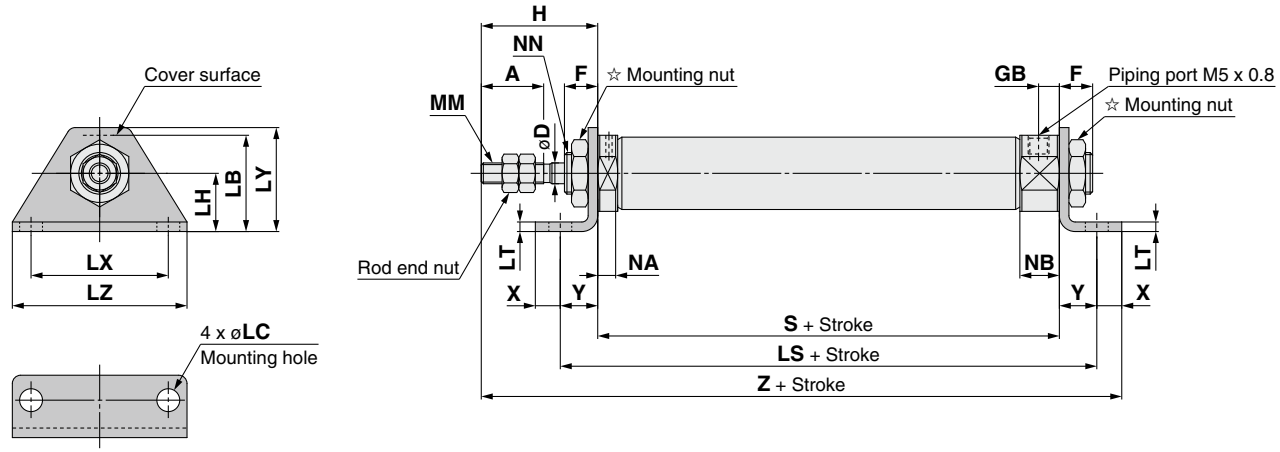

☆ For details of the mounting nut, refer to page 22.

[mm]

Bore size	A	D	F	GB	H	LB	LC	LH	LS								LT	LX	LY	LZ	MM	NA
									5 to 15 st	16 to 30 st	31 to 45 st	46 to 60 st	61 to 75 st	76 to 100 st	101 to 125 st	126 to 150 st						
6	15	3	8	5	28	13	4.5	9	51 (56)	60 (65)	64 (69)	78 (83)	—	—	—	—	1.6	24	16.5	32	M3 x 0.5	3
10	15	4	8	5	28	15	4.5	9	59.5	67	79	91	—	—	—	—	1.6	24	16.5	32	M4 x 0.7	4.8
16	15	5	8	5	28	23	5.5	14	63.5	72	84	96	102	126	144	156	2.3	33	25	42	M5 x 0.8	4.8

Bore size	NB	NN	S								X	Y	Z							
			5 to 15 st	16 to 30 st	31 to 45 st	46 to 60 st	61 to 75 st	76 to 100 st	101 to 125 st	126 to 150 st			5 to 15 st	16 to 30 st	31 to 45 st	46 to 60 st	61 to 75 st	76 to 100 st	101 to 125 st	126 to 150 st
6	9.5	M6 x 1.0	37 (42)	46 (51)	50 (55)	64 (69)	—	—	—	—	5	7	77 (82)	86 (91)	90 (95)	104 (109)	—	—	—	—
10	9.5	M8 x 1.0	45.5	53	65	77	—	—	—	—	5	7	85.5	93	105	117	—	—	—	—
16	9.5	M10 x 1.0	45.5	54	66	78	84	108	126	138	6	9	88.5	97	109	121	127	151	169	181

∗: ( ) in LS, S and Z dimensions: With auto switch

Single Acting, Spring Return: Rod Flange (F)

CJ2F6 – Stroke S Head cover port location Z

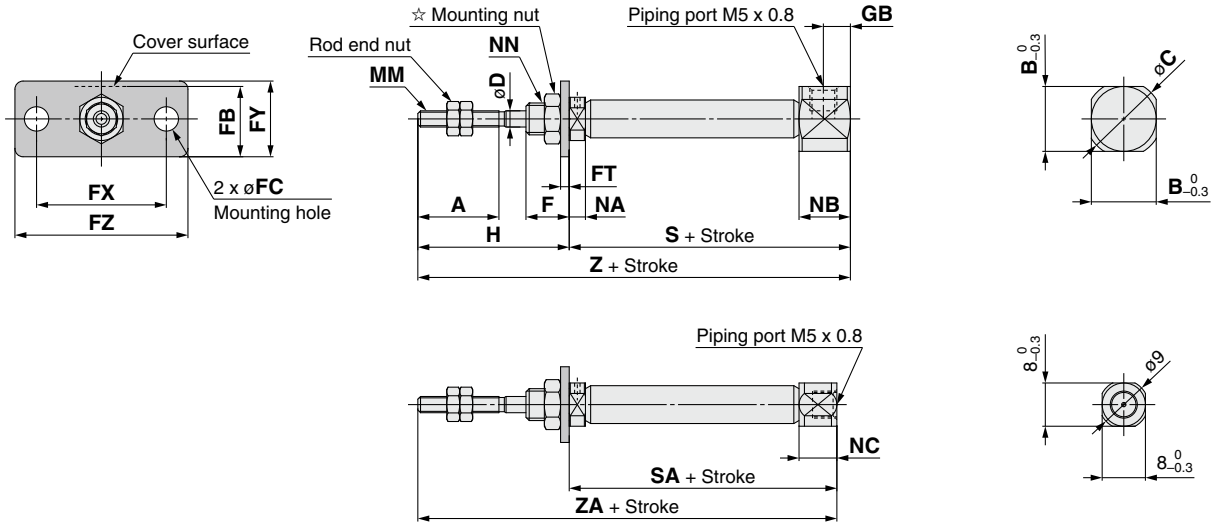

Head cover port location
Axial location (R)

CJ2F $^{10}_{16}$ – Stroke S Head cover port location Z

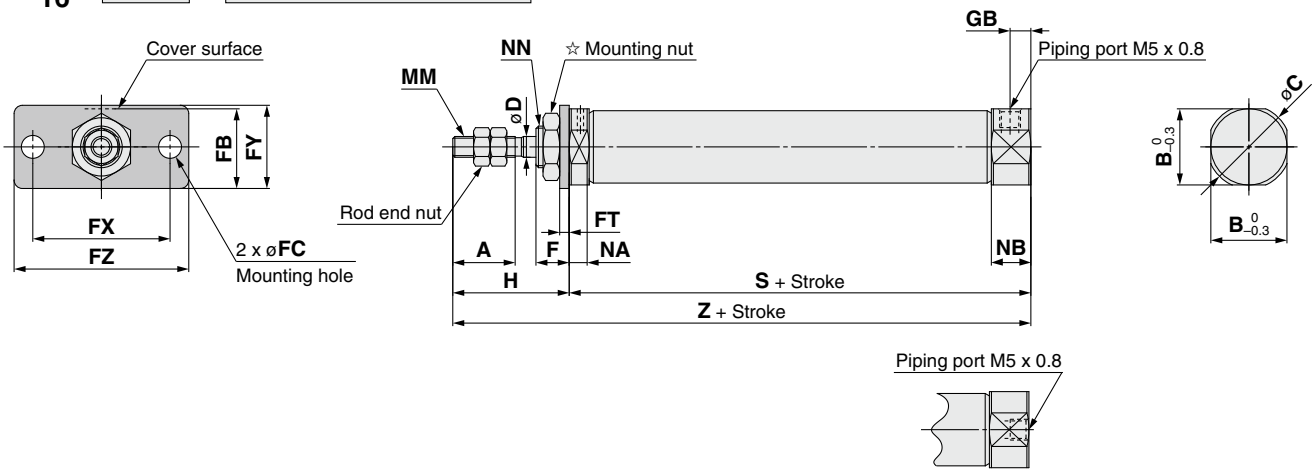

Head cover port location
Axial location (R)

∗: The overall cylinder length does not change.

☆ For details of the mounting nut, refer to page 22.

[mm]

Bore size	A	B	C	D	F	FB	FC	FT	FX	FY	FZ	GB	H	MM	NA	NB	NC	NN	S							
																			5 to 15 st	16 to 30 st	31 to 45 st	46 to 60 st	61 to 75 st	76 to 100 st	101 to 125 st	126 to 150 st
6	15	12	14	3	8	11	4.5	1.6	24	14	32	5	28	M3 x 0.5	3	9.5	7	M6 x 1.0	37 (42)	46 (51)	50 (55)	64 (69)	—	—	—	—
10	15	12	14	4	8	13	4.5	1.6	24	14	32	5	28	M4 x 0.7	4.8	9.5	—	M8 x 1.0	45.5	53	65	77	—	—	—	—
16	15	18.3	20	5	8	19	5.5	2.3	33	20	42	5	28	M5 x 0.8	4.8	9.5	—	M10 x 1.0	45.5	54	66	78	84	108	126	138

Bore size	SA								Z								ZA							
	5 to 15 st	16 to 30 st	31 to 45 st	46 to 60 st	61 to 75 st	76 to 100 st	101 to 125 st	126 to 150 st	5 to 15 st	16 to 30 st	31 to 45 st	46 to 60 st	61 to 75 st	76 to 100 st	101 to 125 st	126 to 150 st	5 to 15 st	16 to 30 st	31 to 45 st	46 to 60 st	61 to 75 st	76 to 100 st	101 to 125 st	126 to 150 st
6	34.5 (39.5)	43.5 (48.5)	47.5 (52.5)	61.5 (66.5)	—	—	—	—	65 (70)	74 (79)	78 (83)	92 (97)	—	—	—	—	62.5 (67.5)	71.5 (76.5)	75.5 (80.5)	89.5 (94.5)	—	—	—	—
10	—	—	—	—	—	—	—	—	73.5	81	93	105	—	—	—	—	—	—	—	—	—	—	—	—
16	—	—	—	—	—	—	—	—	73.5	82	94	106	112	136	154	166	—	—	—	—	—	—	—	—

∗: ( ) in S, SA, Z and ZA dimensions: With auto switch

Single Acting, Spring Return: Head Flange (G)

CJ2G6 – Stroke SZ

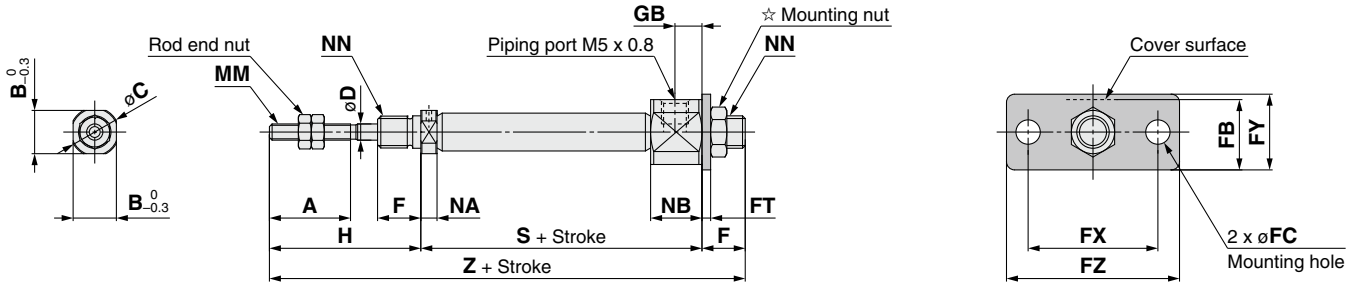

CJ2G 10 16 – Stroke SZ

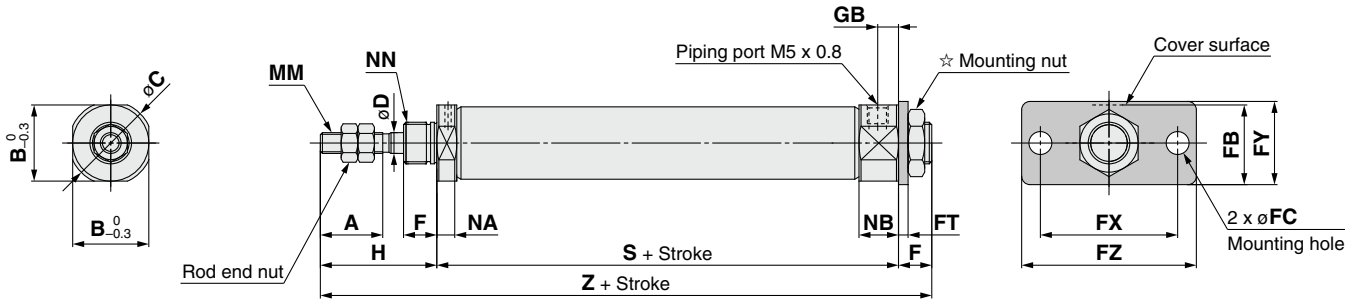

☆ For details of the mounting nut, refer to page 22.

[mm]

Bore size	A	B	C	D	F	FB	FC	FT	FX	FY	FZ	GB	H	MM	NA	NB	NN
6	15	8	9	3	8	11	4.5	1.6	24	14	32	5	28	M3 x 0.5	3	9.5	M6 x 1.0
10	15	12	14	4	8	13	4.5	1.6	24	14	32	5	28	M4 x 0.7	4.8	9.5	M8 x 1.0
16	15	18.3	20	5	8	19	5.5	2.3	33	20	42	5	28	M5 x 0.8	4.8	9.5	M10 x 1.0

Bore size	S								Z							
	5 to 15 st	16 to 30 st	31 to 45 st	46 to 60 st	61 to 75 st	76 to 100 st	101 to 125 st	126 to 150 st	5 to 15 st	16 to 30 st	31 to 45 st	46 to 60 st	61 to 75 st	76 to 100 st	101 to 125 st	126 to 150 st
6	37 (42)	46 (51)	50 (55)	64 (69)	—	—	—	—	73 (78)	82 (87)	86 (91)	100 (105)	—	—	—	—
10	45.5	53	65	77	—	—	—	—	81.5	89	101	113	—	—	—	—
16	45.5	54	66	78	84	108	126	138	81.5	90	102	114	120	144	162	174

∗: ( ) in S and Z dimensions: With auto switch

Single Acting, Spring Return: Double Clevis (D)

CJ2D $\begin{matrix}10\\16\end{matrix}$ – Stroke SZ

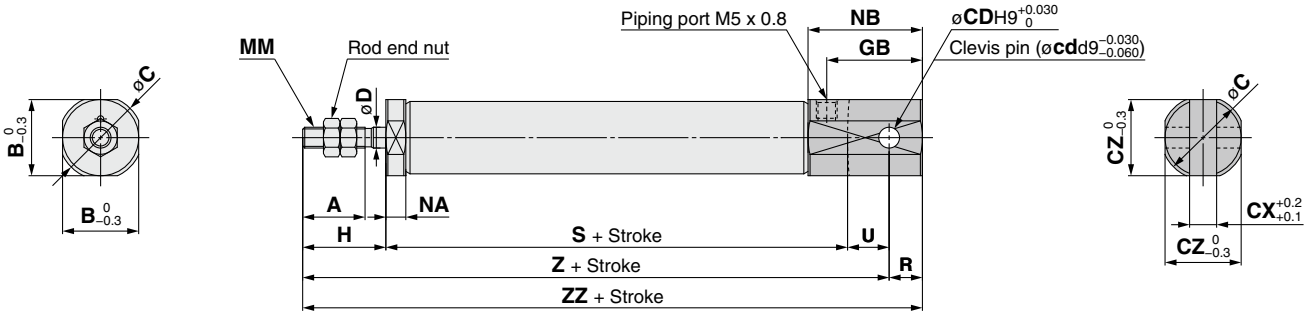

[mm]

Bore size	A	B	C	CD (cd)	CX	CZ	D	GB	H	MM	NA	NB	R	U	S							
															5 to 15 st	16 to 30 st	31 to 45 st	46 to 60 st	61 to 75 st	76 to 100 st	101 to 125 st	126 to 150 st
10	15	12	14	3.3	3.2	12	4	18	20	M4 x 0.7	4.8	22.5	5	8	45.5	53	65	77	—	—	—	—
16	15	18.3	20	5	6.5	18.3	5	23	20	M5 x 0.8	4.8	27.5	8	10	45.5	54	66	78	84	108	126	138

Bore size	Z								ZZ							
	5 to 15 st	16 to 30 st	31 to 45 st	46 to 60 st	61 to 75 st	76 to 100 st	101 to 125 st	126 to 150 st	5 to 15 st	16 to 30 st	31 to 45 st	46 to 60 st	61 to 75 st	76 to 100 st	101 to 125 st	126 to 150 st
10	73.5	81	93	105	—	—	—	—	78.5	86	98	110	—	—	—	—
16	75.5	84	96	108	114	138	156	168	83.5	92	104	116	122	146	164	176

∗: A clevis pin and retaining rings are included.

Single Acting, Spring Extend: Basic (B)

CJ2B6 – Stroke TZ

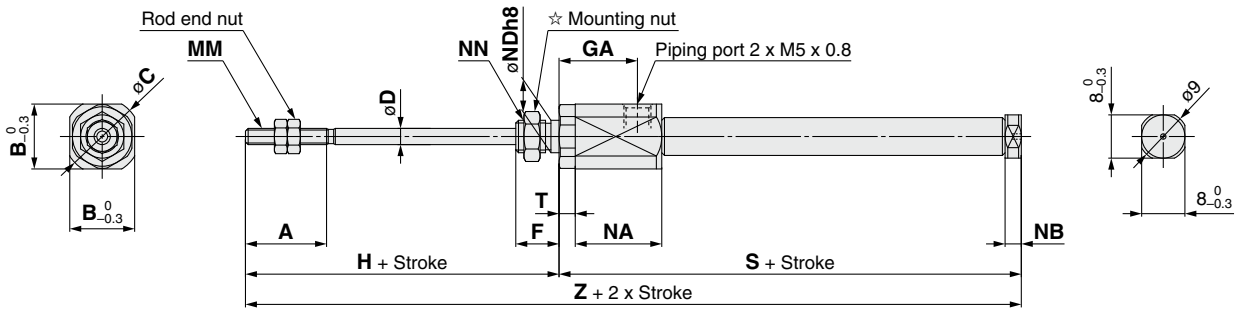

CJ2B 10 16 – Stroke TZ

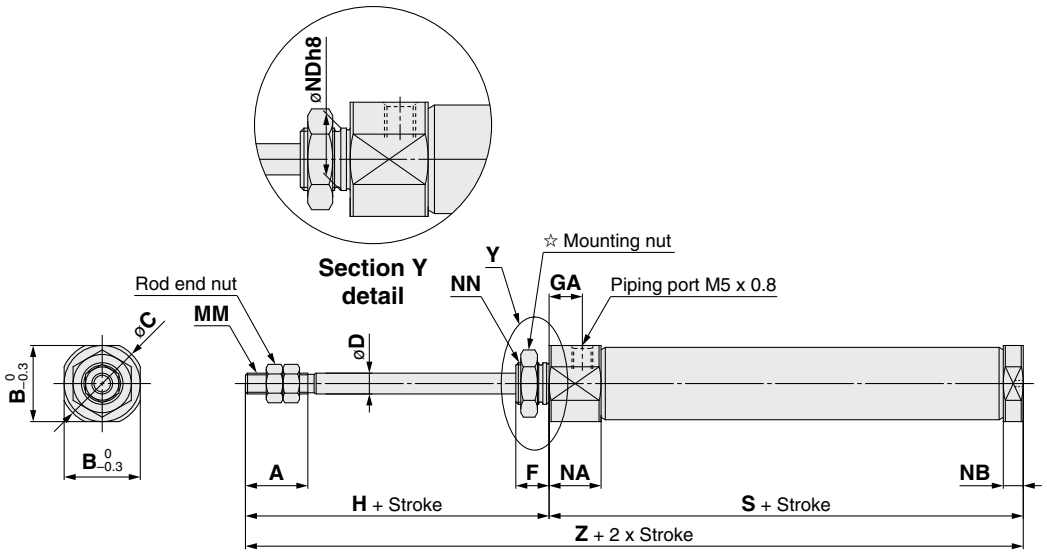

☆ For details of the mounting nut, refer to page 22.

[mm]

Bore size	A	B	C	D	F	GA	H	MM	NA	NB	NDh8	NN	T
6	15	12	14	3	8	14.5	28	M3 x 0.5	16	3	$6^{0}_{-0.018}$	M6 x 1.0	3
10	15	12	14	4	8	8	28	M4 x 0.7	12.5	4.8	$8^{0}_{-0.022}$	M8 x 1.0	—
16	15	18.3	20	5	8	8	28	M5 x 0.8	12.5	4.8	$10^{0}_{-0.022}$	M10 x 1.0	—

Bore size	S								Z							
	5 to 15 st	16 to 30 st	31 to 45 st	46 to 60 st	61 to 75 st	76 to 100 st	101 to 125 st	126 to 150 st	5 to 15 st	16 to 30 st	31 to 45 st	46 to 60 st	61 to 75 st	76 to 100 st	101 to 125 st	126 to 150 st
6	46.5 (51.5)	55.5 (60.5)	59.5 (64.5)	73.5 (78.5)	—	—	—	—	74.5 (79.5)	83.5 (88.5)	87.5 (92.5)	101.5 (106.5)	—	—	—	—
10	48.5	56	68	80	—	—	—	—	76.5	84	96	108	—	—	—	—
16	48.5	57	69	81	87	111	129	141	76.5	85	97	109	115	139	157	169

∗: ( ) in S and Z dimensions: With auto switch

Single Acting, Spring Extend: Double-side Bossed (E)

CJ2E6 – Stroke TZ

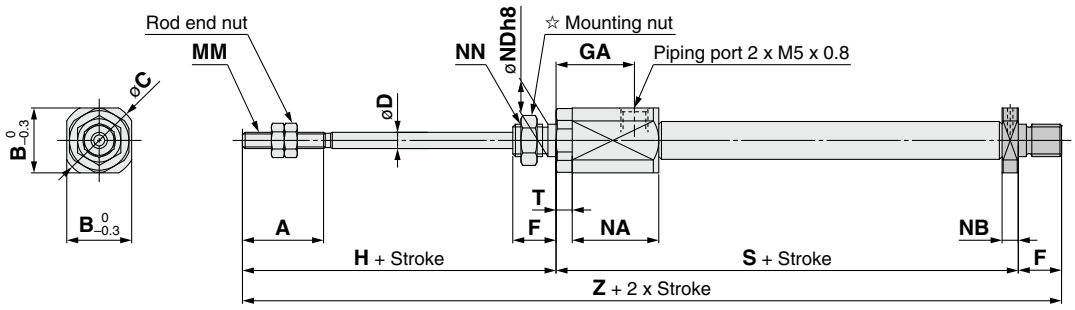

CJ2E 10 16 – Stroke TZ

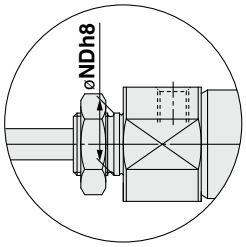

Section Y detail

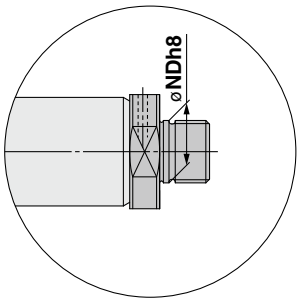

Section YY detail

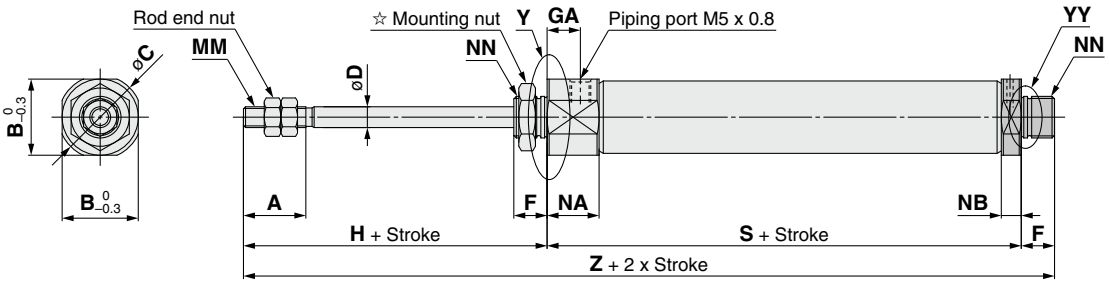

☆ For details of the mounting nut, refer to page 22.

[mm]

Bore size	A	B	C	D	F	GA	H	MM	NA	NB	NDh8	NN
6	15	12	14	3	8	14.5	28	M3 x 0.5	16	3	$6^{0}_{-0.018}$	M6 x 1.0
10	15	12	14	4	8	8	28	M4 x 0.7	12.5	4.8	$8^{0}_{-0.022}$	M8 x 1.0
16	15	18.3	20	5	8	8	28	M5 x 0.8	12.5	4.8	$10^{0}_{-0.022}$	M10 x 1.0

Bore size	S								Z							
	5 to 15 st	16 to 30 st	31 to 45 st	46 to 60 st	61 to 75 st	76 to 100 st	101 to 125 st	126 to 150 st	5 to 15 st	16 to 30 st	31 to 45 st	46 to 60 st	61 to 75 st	76 to 100 st	101 to 125 st	126 to 150 st
6	46.5 (51.5)	55.5 (60.5)	59.5 (64.5)	73.5 (78.5)	—	—	—	—	82.5 (87.5)	91.5 (96.5)	95.5 (100.5)	109.5 (114.5)	—	—	—	—
10	48.5	56	68	80	—	—	—	—	76.5	84	96	108	—	—	—	—
16	48.5	57	69	81	87	111	129	141	76.5	85	97	109	115	139	157	169

∗: ( ) in S and Z dimensions: With auto switch

Single Acting, Spring Extend: Single Foot (L)

CJ2L6 – Stroke TZ

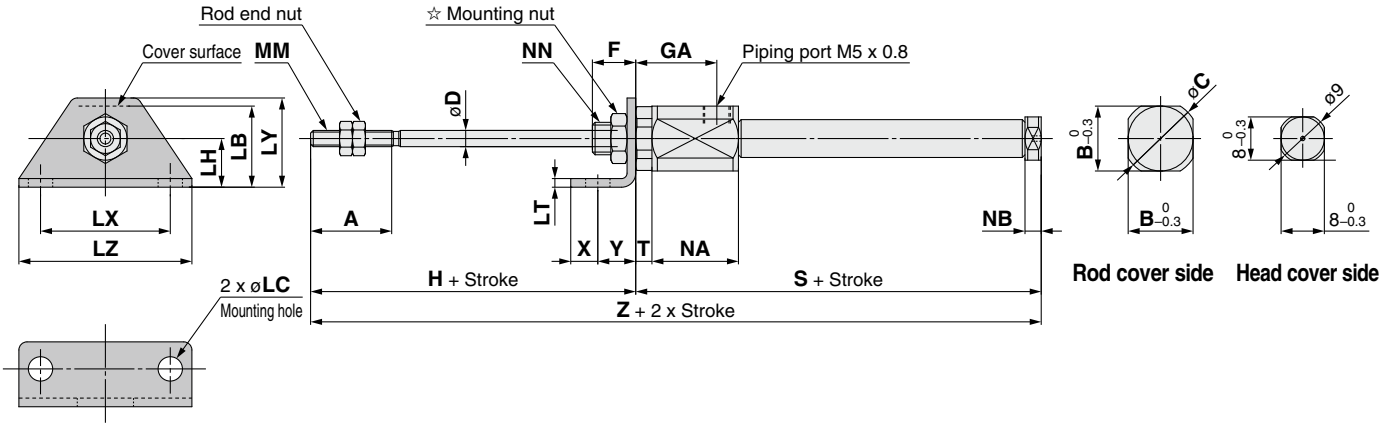

CJL $^{10}_{16}$ – Stroke TZ

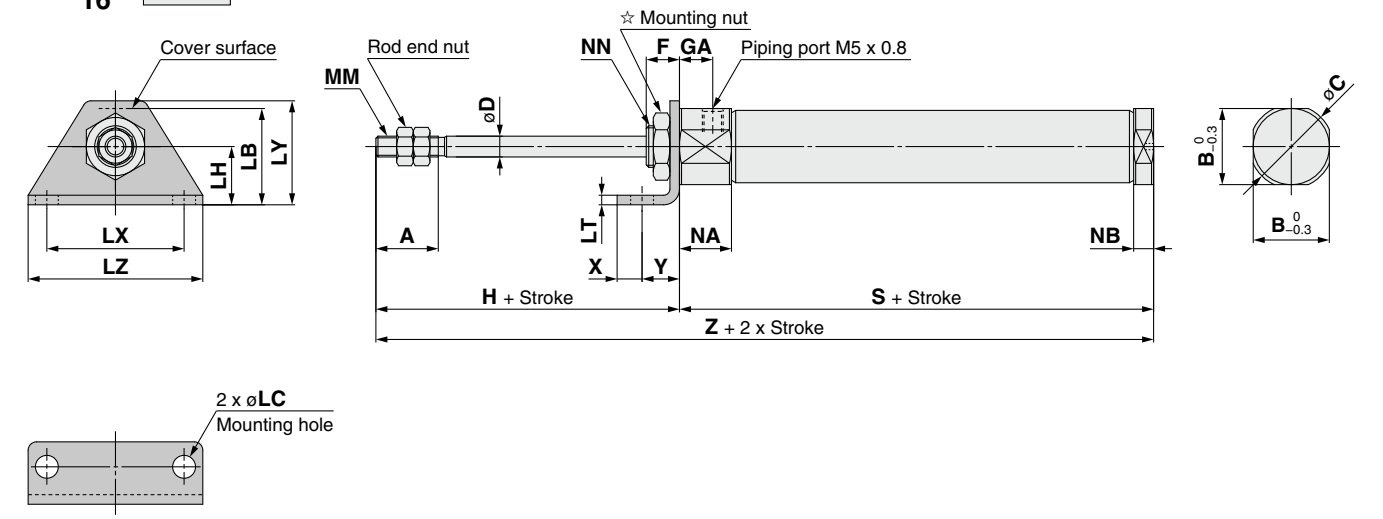

☆ For details of the mounting nut, refer to page 22.

[mm]

Bore size	A	B	C	D	F	GA	H	LB	LC	LH	LT	LX	LY	LZ	MM	NA	NB	NN	T
6	15	12	14	3	8	14.5	28	15	4.5	9	1.6	24	16.5	32	M3 x 0.5	16	3	M6 x 1.0	3
10	15	12	14	4	8	8	28	15	4.5	9	1.6	24	16.5	32	M4 x 0.7	12.5	4.8	M8 x 1.0	—
16	15	18.3	20	5	8	8	28	23	5.5	14	2.3	33	25	42	M5 x 0.8	12.5	4.8	M10 x 1.0	—

Bore size	S								X	Y	Z							
	5 to 15 st	16 to 30 st	31 to 45 st	46 to 60 st	61 to 75 st	76 to 100 st	101 to 125 st	126 to 150 st			5 to 15 st	16 to 30 st	31 to 45 st	46 to 60 st	61 to 75 st	76 to 100 st	101 to 125 st	126 to 150 st
6	46.5 (51.5)	55.5 (60.5)	59.5 (64.5)	73.5 (78.5)	—	—	—	—	5	7	74.5 (79.5)	83.5 (88.5)	87.5 (92.5)	101.5 (106.5)	—	—	—	—
10	48.5	56	68	80	—	—	—	—	5	7	76.5	84	96	108	—	—	—	—
16	48.5	57	69	81	87	111	129	141	6	9	76.5	85	97	109	115	139	157	169

∗: ( ) in S and Z dimensions: With auto switch

Single Acting, Spring Extend: Double Foot (M)

CJ2M6 – Stroke TZ

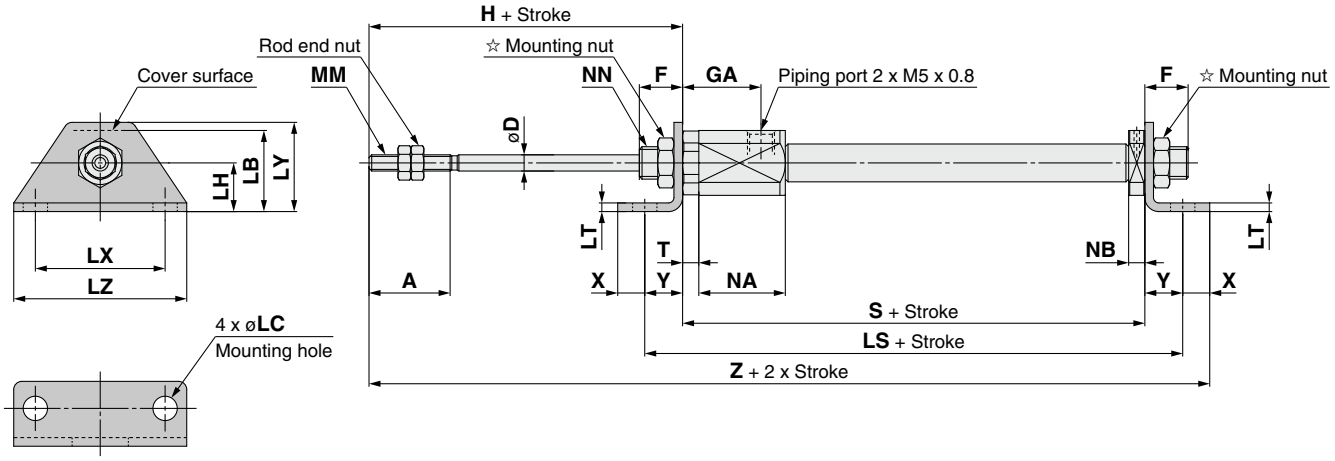

CJ2M $\frac{10}{16}$ – Stroke TZ

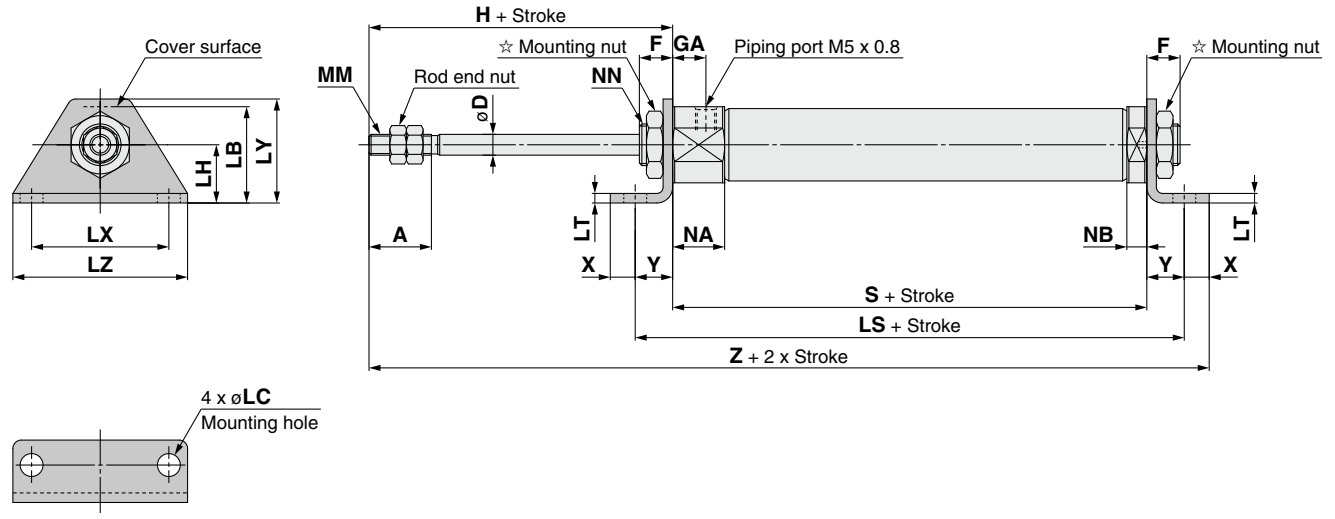

☆ For details of the mounting nut, refer to page 22.

[mm]

Bore size	A	D	F	GA	H	LB	LC	LH	LS 5 to 15 st	LS 16 to 30 st	LS 31 to 45 st	LS 46 to 60 st	LS 61 to 75 st	LS 76 to 100 st	LS 101 to 125 st	LS 126 to 150 st	LT	LX	LY	LZ	MM
6	15	3	8	14.5	28	15	4.5	9	60.5 (65.5)	69.5 (74.5)	73.5 (78.5)	87.5 (101.5)	—	—	—	—	1.6	24	16.5	32	M3 x 0.5
10	15	4	8	8	28	15	4.5	9	62.5	70	82	94	—	—	—	—	1.6	24	16.5	32	M4 x 0.7
16	15	5	8	8	28	23	5.5	14	66.5	75	87	99	105	129	147	159	2.3	33	25	42	M5 x 0.8

Bore size	NA	NB	NN	S 5 to 15 st	S 16 to 30 st	S 31 to 45 st	S 46 to 60 st	S 61 to 75 st	S 76 to 100 st	S 101 to 125 st	S 126 to 150 st	X	Y	Z 5 to 15 st	Z 16 to 30 st	Z 31 to 45 st	Z 46 to 60 st	Z 61 to 75 st	Z 76 to 100 st	Z 101 to 125 st	Z 126 to 150 st
6	16	3	M6 x 1.0	46.5 (51.5)	55.5 (60.5)	59.5 (64.5)	73.5 (78.5)	—	—	—	—	5	7	86.5 (91.5)	95.5 (100.5)	99.5 (104.5)	113.5 (118.5)	—	—	—	—
10	12.5	4.8	M8 x 1.0	48.5	56	68	80	—	—	—	—	5	7	88.5	96	108	120	—	—	—	—
16	12.5	4.8	M10 x 1.0	48.5	57	69	81	87	111	129	141	6	9	91.5	100	112	124	130	154	172	184

∗: ( ) in LS, S and Z dimensions: With auto switch

Single Acting, Spring Extend: Head Flange (G)

CJ2G6 – Stroke TZ

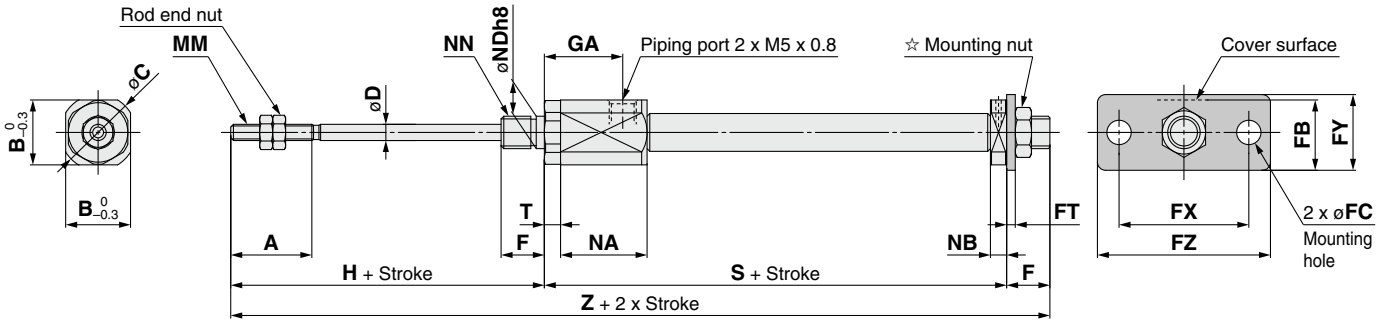

CJ2G 10 16 – Stroke TZ

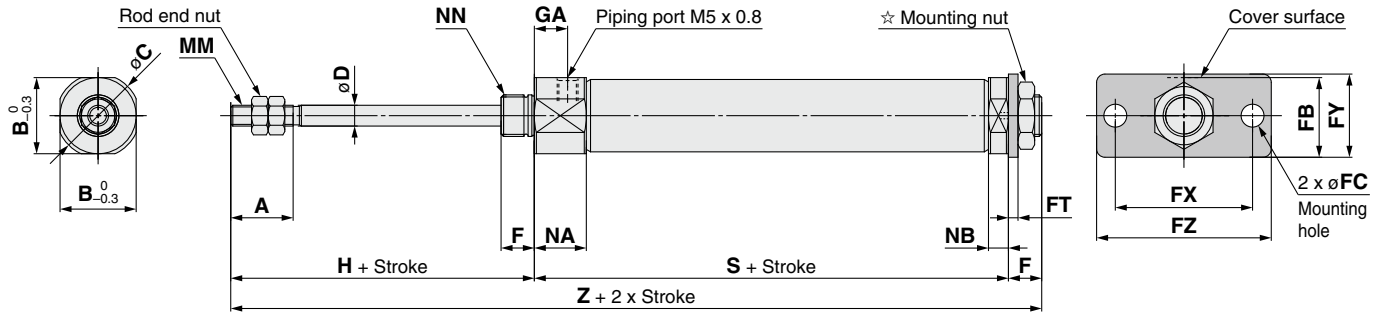

☆ For details of the mounting nut, refer to page 22.

[mm]

Bore size	A	B	C	D	F	FB	FC	FT	FX	FY	FZ	GA	H	MM	NA	NB	NN
6	15	12	14	3	8	13	4.5	1.6	24	14	32	14.5	28	M3 x 0.5	16	3	M6 x 1.0
10	15	12	14	4	8	13	4.5	1.6	24	14	32	8	28	M4 x 0.7	12.5	4.8	M8 x 1.0
16	15	18.3	20	5	8	19	5.5	2.3	33	20	42	8	28	M5 x 0.8	12.5	4.8	M10 x 1.0

Bore size	S								Z							
	5 to 15 st	16 to 30 st	31 to 45 st	46 to 60 st	61 to 75 st	76 to 100 st	101 to 125 st	126 to 150 st	5 to 15 st	16 to 30 st	31 to 45 st	46 to 60 st	61 to 75 st	76 to 100 st	101 to 125 st	126 to 150 st
6	46.5 (51.5)	55.5 (60.5)	59.5 (64.5)	73.5 (78.5)	—	—	—	—	82.5 (87.5)	91.5 (96.5)	95.5 (100.5)	109.5 (114.5)	—	—	—	—
10	48.5	56	68	80	—	—	—	—	76.5	84	96	108	—	—	—	—
16	48.5	57	69	81	87	111	129	141	76.5	85	97	109	115	139	157	169

∗: ( ) in S and Z dimensions: With auto switch

Single Acting, Spring Extend: Rod Flange (F)

CJ2F6 – Stroke TZ

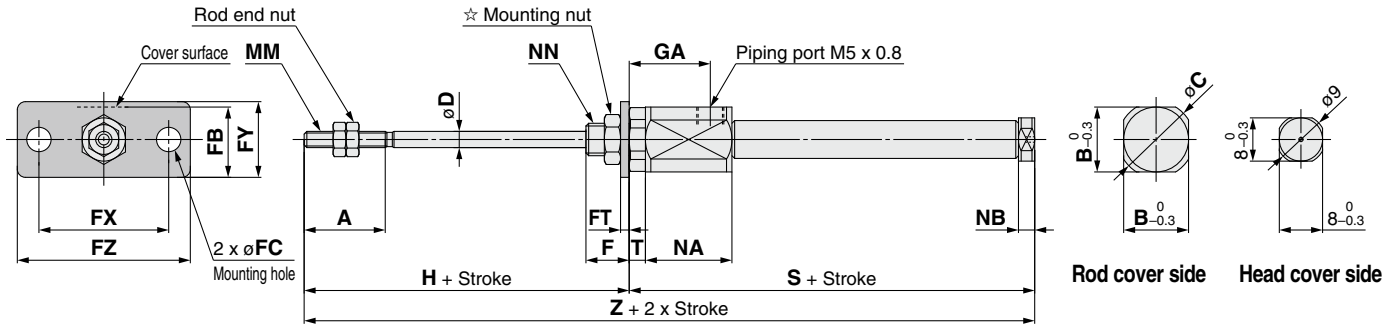

CJ2F 10 16 – Stroke TZ

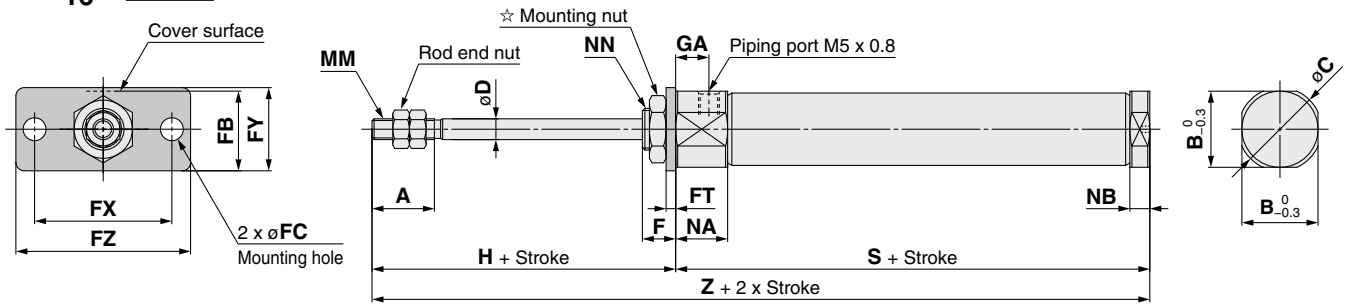

☆ For details of the mounting nut, refer to page 22.

[mm]

Bore size	A	B	C	D	F	FB	FC	FT	FX	FY	FZ	GA	H	MM	NA	NB	NN	T	S								Z							
																			5 to 15 st	16 to 30 st	31 to 45 st	46 to 60 st	61 to 75 st	76 to 100 st	101 to 125 st	126 to 150 st	5 to 15 st	16 to 30 st	31 to 45 st	46 to 60 st	61 to 75 st	76 to 100 st	101 to 125 st	126 to 150 st
6	15	12	14	3	8	13	4.5	1.6	24	14	32	14.5	28	M3 x 0.5	16	3	M6 x 1.0	3	46.5 (51.5)	55.5 (60.5)	59.5 (64.5)	73.5 (78.5)	—	—	—	—	74.5 (79.5)	83.5 (88.5)	87.5 (92.5)	101.5 (106.5)	—	—	—	—
10	15	12	14	4	8	13	4.5	1.6	24	14	32	8	28	M4 x 0.7	12.5	4.8	M8 x 1.0	—	48.5	56	68	80	—	—	—	—	76.5	84	96	108	—	—	—	—
16	15	18.3	20	5	8	19	5.5	2.3	33	20	42	8	28	M5 x 0.8	12.5	4.8	M10 x 1.0	—	48.5	57	69	81	87	111	129	141	76.5	85	97	109	115	139	157	169

∗: ( ) in S and Z dimensions: With auto switch

Single Acting, Spring Extend: Double Clevis (D)

CJ2D 10 16 – Stroke TZ

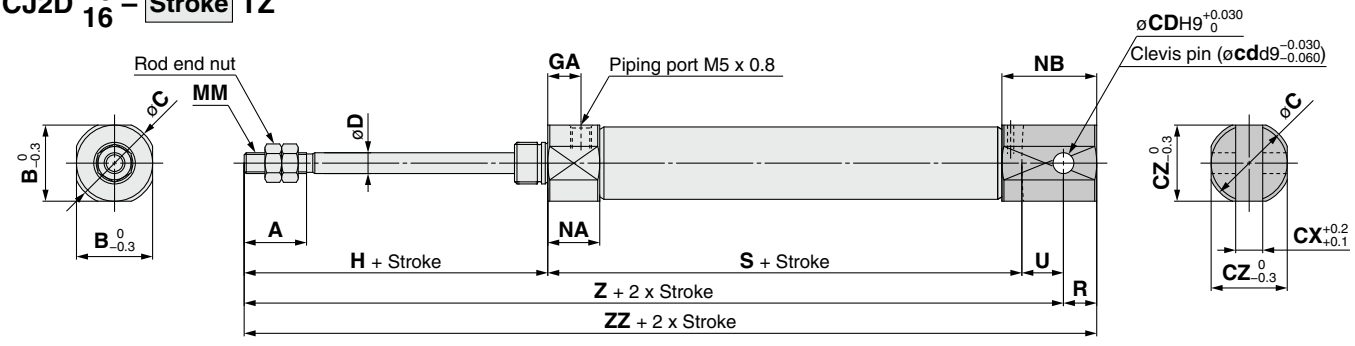

∗: A clevis pin and retaining rings are included.

[mm]

Bore size	A	B	C	CD (cd)	CX	CZ	D	GA	H	MM	NA	NB	R	U	S							
															5 to 15 st	16 to 30 st	31 to 45 st	46 to 60 st	61 to 75 st	76 to 100 st	101 to 125 st	126 to 150 st
10	15	12	14	3.3	3.2	12	4	8	28	M4 x 0.7	12.5	17.8	5	8	48.5	56	68	80	—	—	—	—
16	15	18.3	20	5	6.5	18.3	5	8	28	M5 x 0.8	12.5	22.8	8	10	48.5	57	69	81	87	111	129	141

Bore size	Z								ZZ							
	5 to 15 st	16 to 30 st	31 to 45 st	46 to 60 st	61 to 75 st	76 to 100 st	101 to 125 st	126 to 150 st	5 to 15 st	16 to 30 st	31 to 45 st	46 to 60 st	61 to 75 st	76 to 100 st	101 to 125 st	126 to 150 st
10	84.5	92	104	116	—	—	—	—	89.5	97	109	121	—	—	—	—
16	86.5	95	107	119	125	149	167	179	94.5	103	115	127	133	157	175	187

Air Cylinder: Non-rotating Rod Type
Double Acting, Single Rod
Series CJ2K
ø10, ø16

RoHS

How to Order

Bore size

10	10 mm
16	16 mm

Cylinder standard stroke [mm]
Refer to "Standard Strokes" on page 48.

CJ2K **B** **16** – **60** □ **Z** – □ □ – □

With auto switch **CDJ2K** **B** **16** – **60** □ **Z** – □ □ – **M9BW** □ – **B** – □

With auto switch (Built-in magnet)

Mounting

B	Basic
E	Double-side bossed
D	Double clevis
L	Single foot
M	Double foot
F	Rod flange
G	Head flange

∗: Foot/Flange brackets are shipped together with the product, but not assembled.

Head cover port location

Nil	Perpendicular to axis	
R	Axial	

∗: For double clevis, the product is perpendicular to the cylinder axis.
∗: For double-side bossed, the product is perpendicular to the cylinder axis.

Pivot bracket

Nil	None
N	Pivot bracket is shipped together with the product, but not assembled.

∗: Only for CJ2D (double clevis)
∗: Pivot bracket is shipped together with the product, but not assembled.

Rod end bracket

Nil	None
V	Single knuckle joint
W	Double knuckle joint
T	Rod end cap (Flat type)
U	Rod end cap (Round type)

∗: Rod end bracket is shipped together with the product, but not assembled.
∗: A knuckle joint pin is not provided with the single knuckle joint.

Auto switch

Nil	Without auto switch

∗: For applicable auto switches, refer to the table below.
★ Enter the auto switch mounting type (A or B) even when a built-in magnet cylinder without an auto switch is required.

Made to Order
Refer to page 48 for details.

Auto switch mounting type

A	Rail mounting
B	Band mounting

∗: For rail mounting, screws and nuts for 2 auto switches come with the rail.
∗: Refer to page 107 for auto switch mounting brackets.

Number of auto switches

Nil	2 pcs.
S	1 pc.
n	"n" pcs.

∗: **Refer to "Ordering Example of Cylinder Assembly" on page 48.**

Applicable Auto Switches/Refer to the **WEB catalog** or the Best Pneumatics No. 2 for further information on auto switches.

Type	Special function	Electrical entry	Indicator light	Wiring (Output)	Load voltage DC	Load voltage AC	Auto switch model: Band mounting Perpendicular	Band mounting In-line	Rail mounting Perpendicular	Rail mounting In-line	Lead wire length [m] 0.5 (Nil)	1 (M)	3 (L)	5 (Z)	None (N)	Pre-wired connector	Applicable load	
Solid state auto switch	——	Grommet	Yes	3-wire (NPN)	5 V,12 V	—	**M9NV**	**M9N**	**M9NV**	**M9N**	●	●	●	○	—	○	IC circuit	Relay, PLC
				3-wire (PNP)			**M9PV**	**M9P**	**M9PV**	**M9P**	●	●	●	○	—	○		
				2-wire	12 V		**M9BV**	**M9B**	**M9BV**	**M9B**	●	●	●	○	—	○	—	
		Connector					—	**H7C**	**J79C**	—	●	—	●	●	●	—		
	Diagnostic indication (2-color indicator)	Grommet		3-wire (NPN)	5 V,12 V		**M9NWV**	**M9NW**	**M9NWV**	**M9NW**	●	●	●	○	—	○	IC circuit	
				3-wire (PNP)			**M9PWV**	**M9PW**	**M9PWV**	**M9PW**	●	●	●	○	—	○		
				2-wire	12 V		**M9BWV**	**M9BW**	**M9BWV**	**M9BW**	●	●	●	○	—	○	—	
	Water resistant (2-color indicator)			3-wire (NPN)	5 V,12 V		**M9NAV**∗1	**M9NA**∗1	**M9NAV**∗1	**M9NA**∗1	○	○	●	○	—	○	IC circuit	
				3-wire (PNP)			**M9PAV**∗1	**M9PA**∗1	**M9PAV**∗1	**M9PA**∗1	○	○	●	○	—	○		
				2-wire	12 V		**M9BAV**∗1	**M9BA**∗1	**M9BAV**∗1	**M9BA**∗1	○	○	●	○	—	○	—	
	With diagnostic output (2-color indicator)			4-wire (NPN)	5 V,12 V		—	**H7NF**	—	**F79F**	●	—	●	○	—	○	IC circuit	
Reed auto switch	——	Grommet	Yes	3-wire (NPN equivalent)	—	5 V	—	**A96V**	**A96**	**A96V**	**A96**	●	—	●	—	—	—	IC circuit	—
				2-wire		—	200 V	—	—	**A72**	**A72H**	●	—	●	—	—	—	—	Relay, PLC
					24 V	12 V	100 V	**A93V**∗2	**A93**	**A93V**∗2	**A93**	●	●	●	●	—	—		
			No				100 V or less	**A90V**	**A90**	**A90V**	**A90**	●	—	●	—	—	—	IC circuit	
		Connector	Yes				—	—	**C73C**	**A73C**	—	●	—	●	●	●	—	—	
			No				24 V or less	—	**C80C**	**A80C**	—	●	—	●	●	●	—	IC circuit	
	Diagnostic indication (2-color indicator)	Grommet	Yes			—	—	—	—	**A79W**	—	●	—	●	—	—	—	—	

∗1: Water resistant type auto switches can be mounted on the above models, but in such case SMC cannot guarantee water resistance. Please contact SMC regarding water resistant types with the above model numbers.
∗2: 1 m type lead wire is only applicable to D-A93.

∗: Lead wire length symbols: 0.5 m····· Nil (Example) M9NW
1 m····· M (Example) M9NWM
3 m····· L (Example) M9NWL
5 m····· Z (Example) M9NWZ
None····· N (Example) H7CN

∗: Since there are other applicable auto switches than listed, refer to page 108 for details.
∗: For details about auto switches with pre-wired connector, refer to the **WEB catalog** or the Best Pneumatics No. 2.
∗: Solid state auto switches marked with "○" are produced upon receipt of order.
∗: The D-A9□□/M9□□□/A7□□/A80□/F7□□/J7□□ auto switches are shipped together, (but not assembled). (For band mounting, only auto switch mounting brackets are assembled before being shipped.)

A cylinder which rod does not rotate because of the hexagonal rod shape.

Non-rotating accuracy
ø10: ±1.5°, ø16: ±1°
Can operate without lubrication.

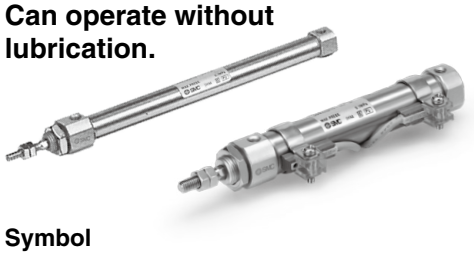

Symbol

Double acting, Single rod, Rubber bumper

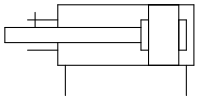

Made to Order

Made to Order
(For details, refer to pages 111 to 120.)

Symbol	Specifications
-XA□	Change of rod end shape
-XC3	Special port location
-XC9	Adjustable stroke cylinder/Adjustable retraction type
-XC10	Dual stroke cylinder/Double rod type
-XC22	Fluororubber seal
-XC51	With hose nipple
-XC85	Grease for food processing equipment
-X446	PTFE grease

⚠ Precautions

Refer to page 121 before handling.

Ordering Example of Cylinder Assembly

Cylinder model: CDJ2KD16-60Z-NW-M9BW-B

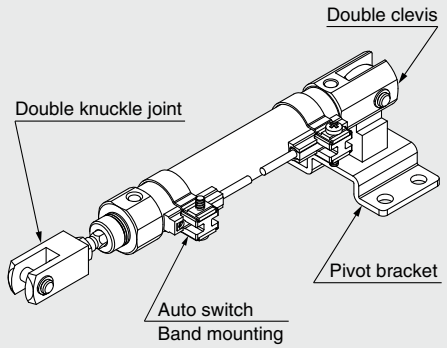

Mounting D: Double clevis
Pivot bracket N: Yes
Rod end bracket W: Double knuckle joint
Auto switch D-M9BW: 2 pcs.
Auto switch mounting B: Band mounting

∗: Pivot bracket, double knuckle joint and auto switch are shipped together with the product, but not assembled.

Specifications

Bore size [mm]	10	16
Action	Double acting, Single rod	
Fluid	Air	
Proof pressure	1 MPa	
Maximum operating pressure	0.7 MPa	
Minimum operating pressure	0.06 MPa	
Ambient and fluid temperature	Without auto switch: –10°C to 70°C With auto switch: –10°C to 60°C (No freezing)	
Cushion	Rubber bumper	
Lubrication	Not required (Non-lube)	
Stroke length tolerance	$^{+1.0}_{0}$	
Rod non-rotating accuracy	±1.5°	±1°
Piston speed	50 to 750 mm/s	
Allowable kinetic energy	0.035 J	0.090 J

Standard Strokes

[mm]

Bore size	Standard stroke
10	15, 30, 45, 60, 75, 100, 125, 150
16	15, 30, 45, 60, 75, 100, 125, 150, 175, 200

∗: Manufacture of intermediate strokes in 1 mm increments is possible. (Spacers are not used.)
∗: Please consult with SMC for strokes which exceed the standard stroke length.
∗: Applicable strokes should be confirmed according to the usage. For details, refer to "Air Cylinders Model Selection" on front matter pages of the Best Pneumatics No. 2 or the **WEB catalog**. In addition, the products that exceed the standard stroke might not be able to fulfill the specifications due to the deflection etc.

Mounting and Accessories /Refer to page 22 for details about part numbers and dimensions.

●···Mounted on the product. ○···Can be ordered within the cylinder model.

Mounting		Basic	Foot	Flange	Double∗1 clevis	Double clevis (including T-bracket)
Standard	Mounting nut	●	●	●	—	—
	Rod end nut	●	●	●	●	●
	Clevis pin	—	—	—	●	●
Option	Single knuckle joint	○	○	○	○	○
	Double knuckle joint∗1	○	○	○	○	○
	Rod end cap (Flat/Round type)	○	○	○	○	○
	T-bracket	—	—	—	○	●

∗1: A pin and retaining rings are shipped together with double clevis and double knuckle joint.

Mounting Brackets/Part No.

Mounting bracket	Bore size [mm]	
	10	16
Foot	CJ-L016C	CJK-L016C
Flange	CJ-F016C	CJK-F016C
T-bracket∗1	CJ-T010C	CJ-T016C

∗1: T-bracket is used with double clevis (D).

Refer to pages 101 to 108 for cylinders with auto switches.

- Auto switch proper mounting position (detection at stroke end) and its mounting height
- Minimum stroke for auto switch mounting
- Operating range
- Auto switch mounting brackets/Part no.

Weights

[g]

Bore size [mm]		10	16
Basic weight (When the stroke is zero)	Basic	25	47
	Axial piping	25	47
	Double clevis (including clevis pin)	27	55
	Head-side bossed	29	50
Additional weight per 15 mm of stroke		4	7
Mounting bracket weight	Single foot	8	25
	Double foot	16	50
	Rod flange	5	13
	Head flange	5	13
Accessories	Single knuckle joint	17	23
	Double knuckle joint (including knuckle pin)	25	21
	Rod end cap (Flat type)	1	2
	Rod end cap (Round type)	1	2
	T-bracket	32	50

∗: Mounting nut and rod end nut are included in the basic weight.
∗: Mounting nut is not included in the basic weight for the double clevis.

Calculation:
Example) **CJ2KL10-45Z**

- Basic weight ····· 25 (ø10)
- Additional weight ····· 4/15 stroke
- Cylinder stroke ····· 45 stroke
- Mounting bracket weight ··· 8 (Single foot)

25 + 4/15 x 45 + 8 = **45 g**

Construction (Not able to disassemble)

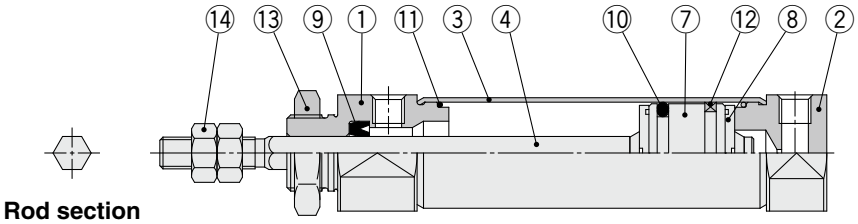

Rod section

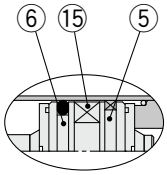

With auto switch

Component Parts

No.	Description	Material	Note
1	**Rod cover**	Aluminum alloy	
2	**Head cover**	Aluminum alloy	
3	**Cylinder tube**	Stainless steel	
4	**Piston rod**	Stainless steel	
5	**Piston A**	Aluminum alloy	
6	**Piston B**	Aluminum alloy	
7	**Piston**	Aluminum alloy	
8	**Bumper**	Urethane	

No.	Description	Material	Note
9	**Rod seal**	NBR	
10	**Piston seal**	NBR	
11	**Tube gasket**	NBR	
12	**Wear ring**	Resin	
13	**Mounting nut**	Rolled steel	
14	**Rod end nut**	Rolled steel	
15	**Magnet**	—	

Basic (B)

CJ2KB $\begin{matrix}10\\16\end{matrix}$ – Stroke Head cover port location Z

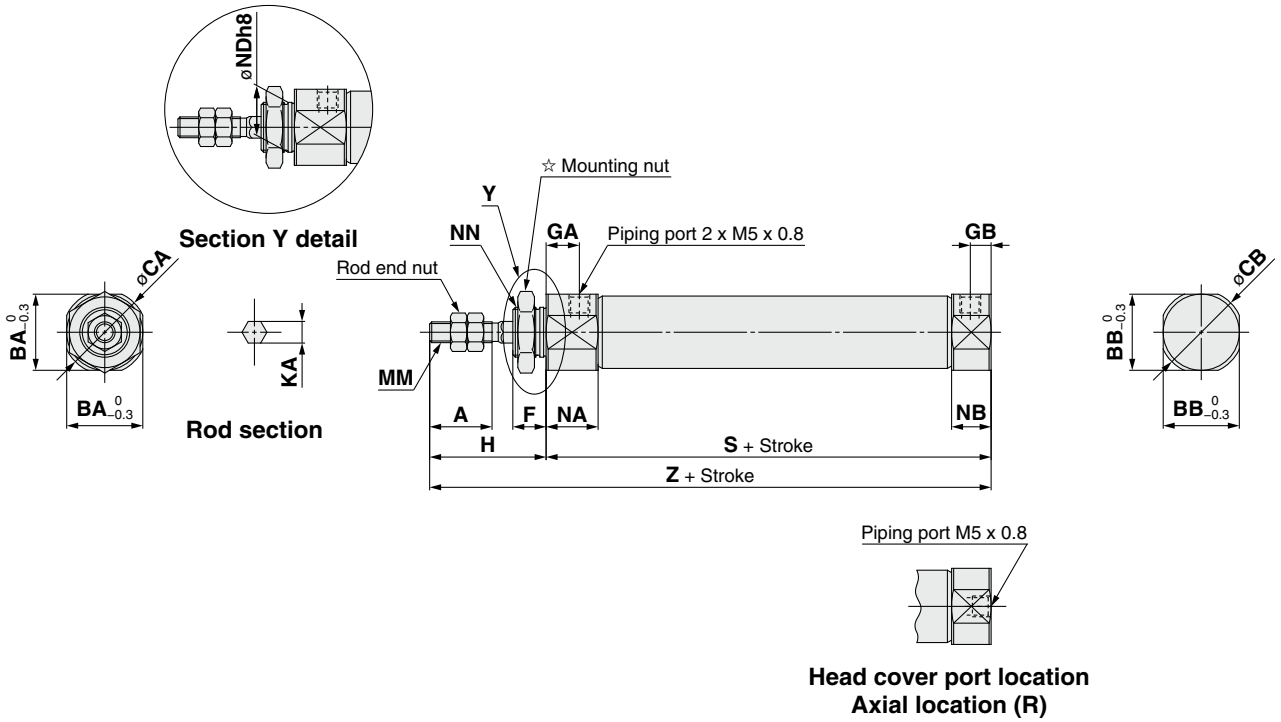

∗: The overall cylinder length does not change.

☆ Refer to page 22 for details of the mounting nut. (SNJ-016C for ø10, SNKJ-016C for ø16)

[mm]

Bore size	A	BA	BB	CA	CB	F	GA	GB	H	KA	MM	NA	NB	NDh8	NN	S	Z
10	15	15	12	17	14	8	8	5	28	4.2	M4 x 0.7	12.5	9.5	$10^{0}_{-0.022}$	M10 x 1.0	46	74
16	15	18.3	18.3	20	20	8	8	5	28	5.2	M5 x 0.8	12.5	9.5	$12^{0}_{-0.027}$	M12 x 1.0	47	75

Double-side Bossed (E)

CJ2KE $\begin{matrix}10\\16\end{matrix}$ – Stroke Z

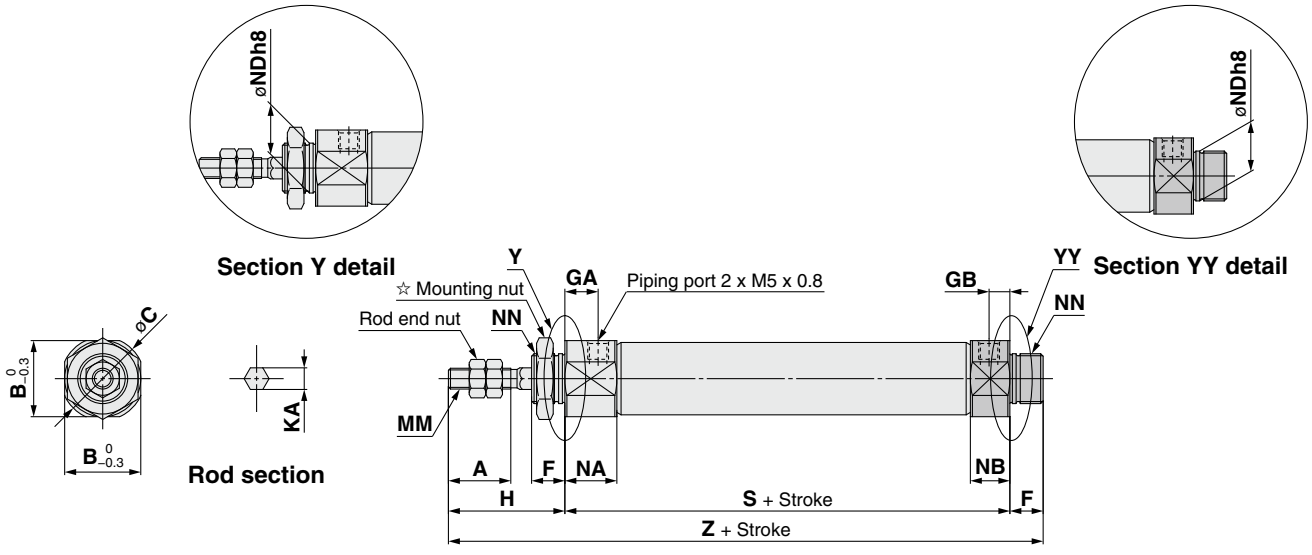

☆ Refer to page 22 for details of the mounting nut. (SNJ-016C for ø10, SNKJ-016C for ø16)

[mm]

Bore size	A	B	C	F	GA	GB	H	KA	MM	NA	NB	NDh8	NN	S	Z
10	15	15	17	8	8	5	28	4.2	M4 x 0.7	12.5	9.5	$10^{0}_{-0.022}$	M10 x 1.0	46	82
16	15	18.3	20	8	8	5	28	5.2	M5 x 0.8	12.5	9.5	$12^{0}_{-0.027}$	M12 x 1.0	47	83

Double Clevis (D)

CJ2KD $\begin{matrix}10\\16\end{matrix}$ – Stroke Z

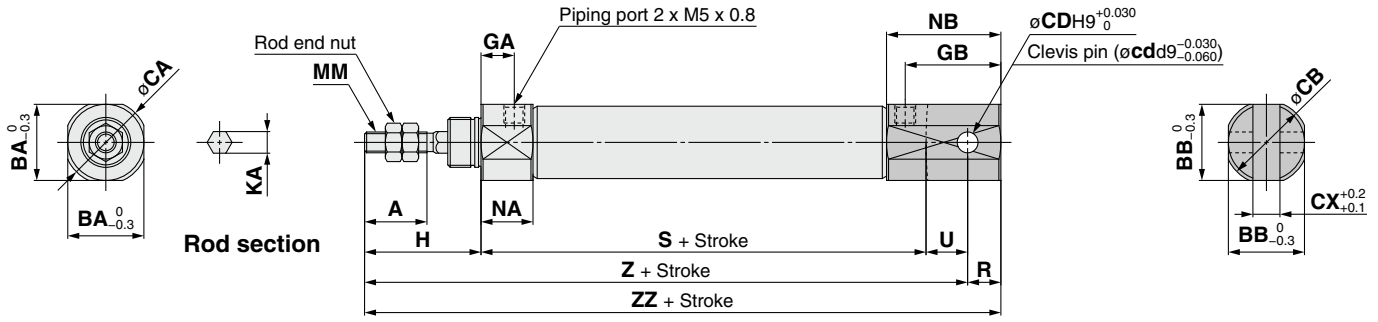

∗: A clevis pin and retaining rings are included.

[mm]

Bore size	A	BA	BB	CA	CB	CD(cd)	CX	GA	GB	H	KA	MM	NA	NB	R	S	U	Z	ZZ
10	15	15	12	17	14	3.3	3.2	8	18	28	4.2	M4 x 0.7	12.5	22.5	5	46	8	82	87
16	15	18.3	18.3	20	20	5	6.5	8	23	28	5.2	M5 x 0.8	12.5	27.5	8	47	10	85	93

Single Foot (L)

CJ2KL $\begin{matrix}10\\16\end{matrix}$ – Stroke Head cover port location Z

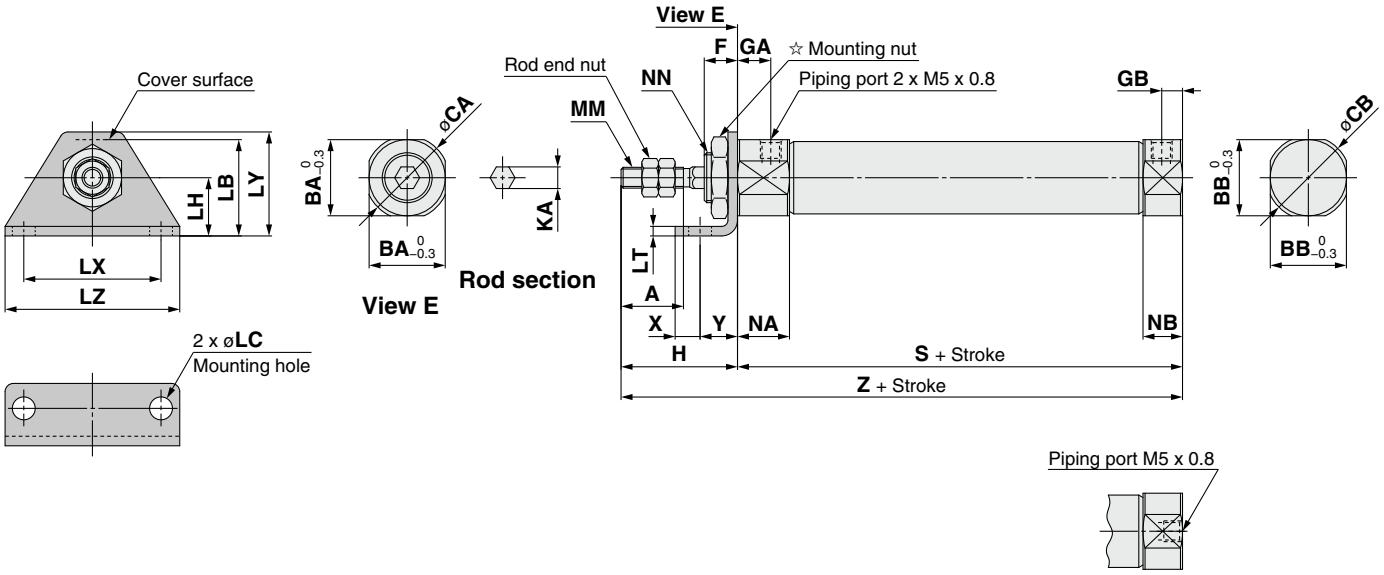

Head cover port location
Axial location (R)

∗: The overall cylinder length does not change.

☆ Refer to page 22 for details of the mounting nut. (SNJ-016C for ø10, SNKJ-016C for ø16)

[mm]

Bore size	A	BA	BB	CA	CB	F	GA	GB	H	KA	LB	LC	LH	LT	LX	LY	LZ	MM	NA	NB	NN	S	X	Y	Z
10	15	15	12	17	14	8	8	5	28	4.2	21.5	5.5	14	2.3	33	25	42	M4 x 0.7	12.5	9.5	M10 x 1.0	46	6	9	74
16	15	18.3	18.3	20	20	8	8	5	28	5.2	23	5.5	14	2.3	33	25	42	M5 x 0.8	12.5	9.5	M12 x 1.0	47	6	9	75

Double Foot (M)

CJ2KM $\begin{matrix}10\\16\end{matrix}$ – Stroke Z

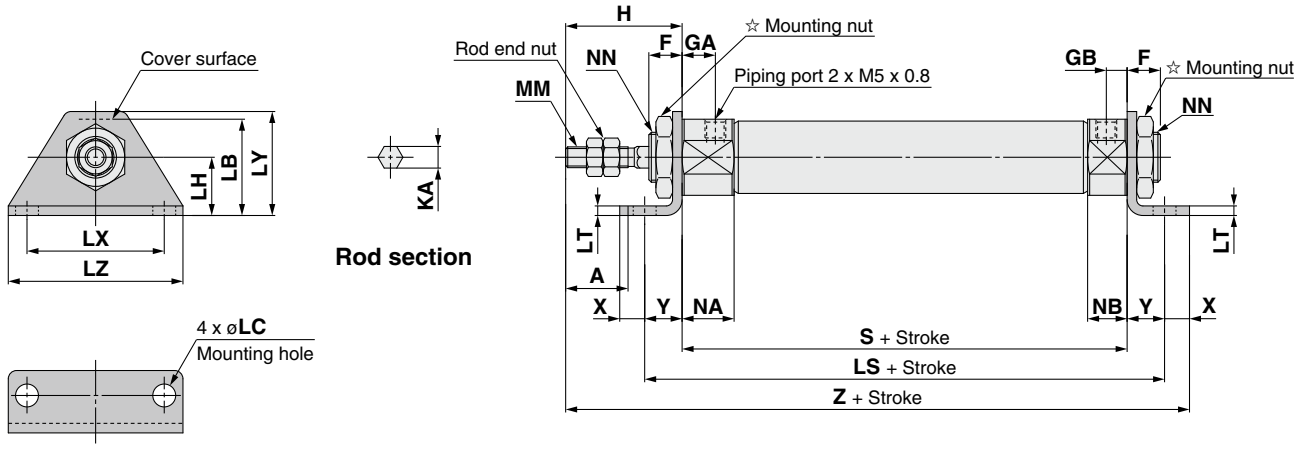

☆ Refer to page 22 for details of the mounting nut. (SNJ-016C for ø10, SNKJ-016C for ø16)

[mm]

Bore size	A	F	GA	GB	H	KA	LB	LC	LH	LS	LT	LX	LY	LZ	MM	NA	NB	NN	S	X	Y	Z
10	15	8	8	5	28	4.2	21.5	5.5	14	64	2.3	33	25	42	M4 x 0.7	12.5	9.5	M10 x 1.0	46	6	9	89
16	15	8	8	5	28	5.2	23	5.5	14	65	2.3	33	25	42	M5 x 0.8	12.5	9.5	M12 x 1.0	47	6	9	90

Rod Flange (F)

CJ2KF $\begin{matrix}10\\16\end{matrix}$ – Stroke Head cover port location Z

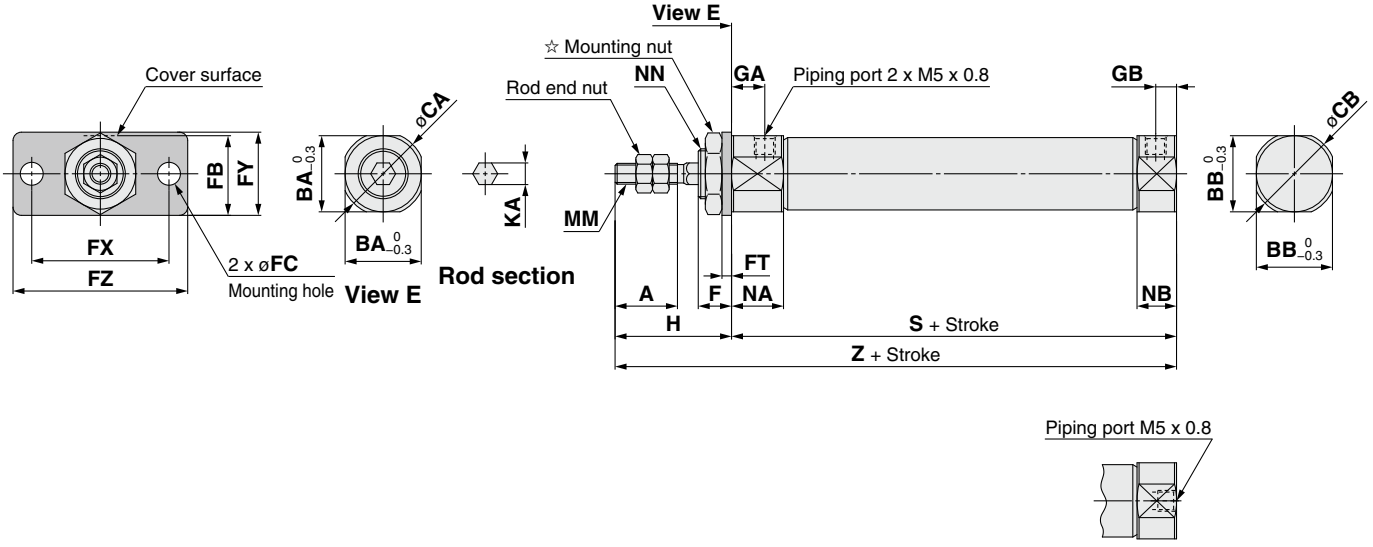

Head cover port location
Axial location (R)

∗: The overall cylinder length does not change.

☆ Refer to page 22 for details of the mounting nut. (SNJ-016C for ø10, SNKJ-016C for ø16)

[mm]

Bore size	A	BA	BB	CA	CB	F	FB	FC	FT	FX	FY	FZ	GA	GB	H	KA	MM	NA	NB	NN	S	Z
10	15	15	12	17	14	8	17.5	5.5	2.3	33	20	42	8	5	28	4.2	M4 x 0.7	12.5	9.5	M10 x 1.0	46	74
16	15	18.3	18.3	20	20	8	19	5.5	2.3	33	20	42	8	5	28	5.2	M5 x 0.8	12.5	9.5	M12 x 1.0	47	75

Head Flange (G)

CJ2KG $^{10}_{16}$ – Stroke Z

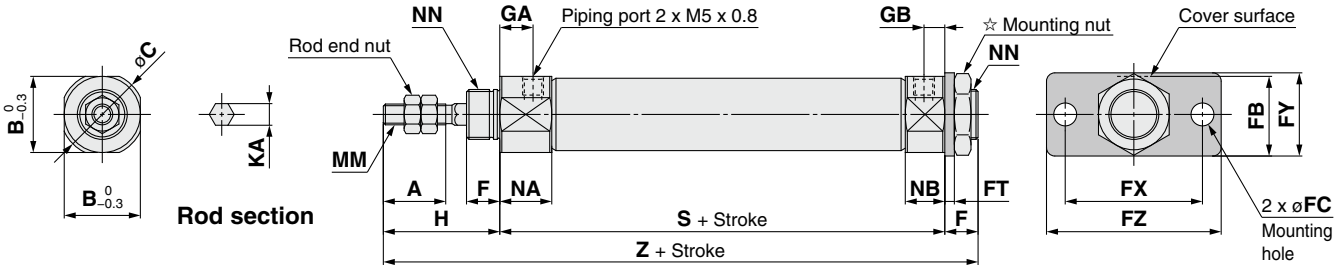

☆ Refer to page 22 for details of the mounting nut. (SNJ-016C for ø10, SNKJ-016C for ø16)

[mm]

Bore size	A	B	C	F	FB	FC	FT	FX	FY	FZ	GA	GB	H	KA	MM	NA	NB	NN	S	Z
10	15	15	17	8	17.5	5.5	2.3	33	20	42	8	5	28	4.2	M4 x 0.7	12.5	9.5	M10 x 1.0	46	82
16	15	18.3	20	8	19	5.5	2.3	33	20	42	8	5	28	5.2	M5 x 0.8	12.5	9.5	M12 x 1.0	47	83

Air Cylinder: Non-rotating Rod Type
Single Acting, Spring Return/Extend

Series CJ2K
ø10, ø16

RoHS

How to Order

Cylinder standard stroke [mm] Refer to "Standard Strokes" on page 55.

Action

S	Single acting, Spring return
T	Single acting, Spring extend

CJ2K B 16 – 45 S Z – – – –

With auto switch CDJ2K B 16 – 45 S Z – – – M9BW – B –

With auto switch (Built-in magnet)

Mounting

B	Basic
E	Double-side bossed
D	Double clevis
L	Single foot
M	Double foot
F	Rod flange
G	Head flange

∗: Foot/Flange brackets are shipped together with the product, but not assembled.

Bore size

10	10 mm
16	16 mm

Head cover port location

Nil	Perpendicular to axis	
R	Axial	

∗: For double clevis, the product is perpendicular to the cylinder axis.
∗: For double-side bossed, the product is perpendicular to the cylinder axis.
∗: Not applicable to single acting, spring extend (T).

Pivot bracket

Nil	None
N	Pivot bracket is shipped together with the product, but not assembled.

∗: Only for CJ2D (double clevis)
∗: Pivot bracket is shipped together with the product, but not assembled.

Rod end bracket

Nil	None
V	Single knuckle joint
W	Double knuckle joint
T	Rod end cap (Flat type)
U	Rod end cap (Round type)

∗: Rod end bracket is shipped together with the product, but not assembled.
∗: A knuckle joint pin is not provided with the single knuckle joint.

Auto switch

Nil	Without auto switch

∗: For applicable auto switches, refer to the table below.
★ Enter the auto switch mounting type (A or B) even when a built-in magnet cylinder without an auto switch is required.

Auto switch mounting type

A	Rail mounting
B	Band mounting

∗: For rail mounting, screws and nuts for 2 auto switches come with the rail.
∗: Refer to page 107 for auto switch mounting brackets.

Number of auto switches

Nil	2 pcs.
S	1 pc.
n	"n" pcs.

Made to Order
Refer to page 55 for details.

∗: **Refer to "Ordering Example of Cylinder Assembly" on page 55.**

Applicable Auto Switches/Refer to the **WEB catalog** or the Best Pneumatics No. 2 for further information on auto switches.

Type	Special function	Electrical entry	Indicator light	Wiring (Output)	Load voltage DC	Load voltage AC	Auto switch model: Band mounting Perpendicular	Band mounting In-line	Rail mounting Perpendicular	Rail mounting In-line	Lead wire length [m]: 0.5 (Nil)	1 (M)	3 (L)	5 (Z)	None (N)	Pre-wired connector	Applicable load	
Solid state auto switch	——	Grommet	Yes	3-wire (NPN)	5 V,12 V	—	M9NV	M9N	M9NV	M9N	●	●	●	○	—	○	IC circuit	Relay, PLC
				3-wire (PNP)			M9PV	M9P	M9PV	M9P	●	●	●	○	—	○		
				2-wire	12 V		M9BV	M9B	M9BV	M9B	●	●	●	○	—	○	—	
		Connector					—	H7C	J79C	—	●	—	●	●	●	—		
	Diagnostic indication (2-color indicator)	Grommet		3-wire (NPN)	5 V,12 V		M9NWV	M9NW	M9NWV	M9NW	●	●	●	○	—	○	IC circuit	
				3-wire (PNP)			M9PWV	M9PW	M9PWV	M9PW	●	●	●	○	—	○		
				2-wire	12 V		M9BWV	M9BW	M9BWV	M9BW	●	●	●	○	—	○	—	
	Water resistant (2-color indicator)			3-wire (NPN)	5 V,12 V		M9NAV∗1	M9NA∗1	M9NAV∗1	M9NA∗1	○	○	●	○	—	○	IC circuit	
				3-wire (PNP)			M9PAV∗1	M9PA∗1	M9PAV∗1	M9PA∗1	○	○	●	○	—	○		
				2-wire	12 V		M9BAV∗1	M9BA∗1	M9BAV∗1	M9BA∗1	○	○	●	○	—	○	—	
	With diagnostic output (2-color indicator)			4-wire (NPN)	5 V,12 V		—	H7NF	—	F79F	●	—	●	○	—	○	IC circuit	
Reed auto switch	——	Grommet	Yes	3-wire (NPN equivalent)	—	5 V	—	A96V	A96	A96V	A96	●	—	●	—	—	—	IC circuit	—
				2-wire	24 V	—	200 V	—	—	A72	A72H	●	—	●	—	—	—	—	Relay, PLC
						12 V	100 V	A93V∗2	A93	A93V∗2	A93	●	●	●	●	—	—		
			No				100 V or less	A90V	A90	A90V	A90	●	—	●	—	—	—	IC circuit	
		Connector	Yes				—	—	C73C	A73C	—	●	—	●	●	●	—	—	
			No				24 V or less	—	C80C	A80C	—	●	—	●	●	●	—	IC circuit	
	Diagnostic indication (2-color indicator)	Grommet	Yes		—	—	—	—	A79W	—	●	—	●	—	—	—	—	

∗1: Water resistant type auto switches can be mounted on the above models, but in such case SMC cannot guarantee water resistance. Please contact SMC regarding water resistant types with the above model numbers.
∗2: 1 m type lead wire is only applicable to D-A93.

∗: Lead wire length symbols: 0.5 m····· Nil (Example) M9NW
1 m····· M (Example) M9NWM
3 m····· L (Example) M9NWL
5 m····· Z (Example) M9NWZ
None····· N (Example) H7CN

∗: Since there are other applicable auto switches than listed, refer to page 108 for details.
∗: For details about auto switches with pre-wired connector, refer to the **WEB catalog** or the Best Pneumatics No. 2.
∗: Solid state auto switches marked with "○" are produced upon receipt of order.
∗: The D-A9□□/M9□□□/A7□□/A80□/F7□□/J7□□ auto switches are shipped together, (but not assembled). (For band mounting, only auto switch mounting brackets are assembled before being shipped.)

A cylinder which rod does not rotate because of the hexagonal rod shape.

Non-rotating accuracy
ø10: ±1.5°, ø16: ±1°
Can operate without lubrication.

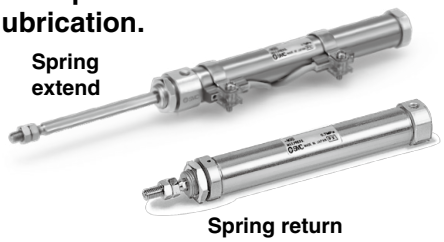

Symbol

Single acting, Spring return, Rubber bumper

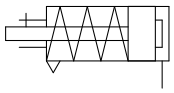

Single acting, Spring extend, Rubber bumper

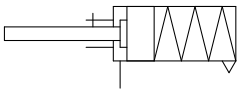

Made to Order

Made to Order
(For details, refer to pages 111 to 120.)

Symbol	Specifications
-XA□	Change of rod end shape
-XC51	With hose nipple
-XC85	Grease for food processing equipment
-X446	PTFE grease

⚠ Precautions

Refer to page 121 before handling.

Ordering Example of Cylinder Assembly

Cylinder model: CDJ2KD16-45SZ-NW-M9BW-B

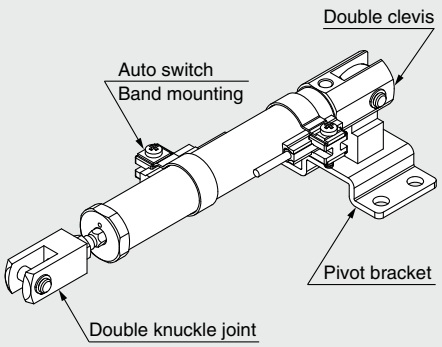

Mounting D: Double clevis
Pivot bracket N: Yes
Rod end bracket W: Double knuckle joint
Auto switch D-M9BW: 2 pcs.
Auto switch mounting B: Band mounting

∗: Pivot bracket, double knuckle joint and auto switch are shipped together with the product, but not assembled.

Specifications

Bore size [mm]	10	16
Action	Single acting, Spring return/Single acting, Spring extend	
Fluid	Air	
Proof pressure	1 MPa	
Maximum operating pressure	0.7 MPa	
Minimum operating pressure	0.15 MPa	
Ambient and fluid temperature	Without auto switch: –10°C to 70°C With auto switch: –10°C to 60°C (No freezing)	
Cushion	Rubber bumper (standard equipment)	
Lubrication	Not required (Non-lube)	
Stroke length tolerance	$^{+1.0}_{0}$	
Rod non-rotating accuracy	±1.5°	±1°
Piston speed	50 to 750 mm/s	
Allowable kinetic energy	0.035 J	0.090 J

Standard Strokes

[mm]

Bore size	Standard stroke
10	15, 30, 45, 60
16	15, 30, 45, 60, 75, 100, 125, 150

∗: Manufacture of intermediate strokes in 1 mm increments is possible. (Spacers are not used.)
∗: Please consult with SMC for strokes which exceed the standard stroke length.
∗: Applicable strokes should be confirmed according to the usage. For details, refer to "Air Cylinders Model Selection" on front matter pages of the Best Pneumatics No. 2 or the **WEB catalog**. In addition, the products that exceed the standard stroke might not be able to fulfill the specifications due to the deflection etc.

Spring Reaction Force

Bore size [mm]	Spring reaction force [N]	
	Primary	Secondary
10	3.53	6.86
16	6.86	14.2

Spring with primary mounting load

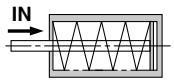

When the spring is set in the cylinder

Spring with secondary mounting load

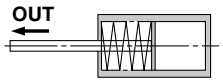

When the spring is contracted by applying air

Mounting and Accessories

/Refer to page 22 for details about part numbers and dimensions.

●···Mounted on the product. ○···Can be ordered within the cylinder model.

Mounting		Basic	Foot	Flange	Double∗1 clevis	Double clevis (including T-bracket)
Standard	Mounting nut	●	●	●	—	—
	Rod end nut	●	●	●	●	●
	Clevis pin	—	—	—	●	●
Option	Single knuckle joint	○	○	○	○	○
	Double knuckle joint∗1	○	○	○	○	○
	Rod end cap (Flat/Round type)	○	○	○	○	○
	T-bracket	—	—	—	○	●

∗1: A pin and retaining rings are shipped together with double clevis and double knuckle joint.

Mounting Brackets/Part No.

Mounting bracket	Bore size [mm]	
	10	16
Foot	CJ-L016C	CJK-L016C
Flange	CJ-F016C	CJK-F016C
T-bracket∗1	CJ-T010C	CJ-T016C

∗1: T-bracket is used with double clevis (D).

Refer to pages 101 to 108 for cylinders with auto switches.

- Auto switch proper mounting position (detection at stroke end) and its mounting height
- Minimum stroke for auto switch mounting
- Operating range
- Auto switch mounting brackets/Part no.

Weights

Spring Return

[g]

Bore size [mm]		10				16			
Mounting		Basic	Axial piping	Double clevis (including clevis pin)	Head-side bossed	Basic	Axial piping	Double clevis (including clevis pin)	Head-side bossed
Basic weight	15 stroke	30	30	30	31	64	64	70	66
	30 stroke	38	38	38	39	79	79	86	81
	45 stroke	48	48	48	49	97	97	104	99
	60 stroke	58	58	58	59	116	116	122	118
	75 stroke					138	138	144	140
	100 stroke					171	171	178	173
	125 stroke					209	209	215	211
	150 stroke					232	232	238	234
Mounting bracket weight	Single foot	8				25			
	Double foot	16				50			
	Rod flange	5				13			
	Head flange	5				13			
Accessories	Single knuckle joint	17				23			
	Double knuckle joint (including knuckle pin)	25				21			
	Rod end cap (Flat type)	1				2			
	Rod end cap (Round type)	1				2			
	T-bracket	32				50			

∗: Mounting nut and rod end nut are included in the basic weight.
∗: Mounting nut is not included in the basic weight for the double clevis.
Calculation:
Example) **CJ2KL10-45SZ**
- Basic weight ····· 48 (ø10)
- Cylinder stroke····· 45 stroke
- Mounting bracket weight····· 8 (Single foot)

48 + 8 = **56 g**

Spring Extend

[g]

Bore size [mm]		10				16			
Mounting		Basic	Axial piping	Double clevis (including clevis pin)	Head-side bossed	Basic	Axial piping	Double clevis (including clevis pin)	Head-side bossed
Basic weight	15 stroke	29	29	31	31	64	64	72	69
	30 stroke	35	35	37	38	79	79	86	83
	45 stroke	44	44	46	46	95	95	103	99
	60 stroke	52	52	54	55	111	111	119	115
	75 stroke					133	133	140	137
	100 stroke					163	163	170	167
	125 stroke					198	198	206	202
	150 stroke					219	219	227	223
Mounting bracket weight	Single foot	8				25			
	Double foot	16				50			
	Rod flange	5				13			
	Head flange	5				13			
Accessories	Single knuckle joint	17				23			
	Double knuckle joint (including knuckle pin)	25				21			
	Rod end cap (Flat type)	1				2			
	Rod end cap (Round type)	1				2			
	T-bracket	32				50			

∗: Mounting nut and rod end nut are included in the basic weight.
∗: Mounting nut is not included in the basic weight for the double clevis.
Calculation:
Example) **CJ2KL10-45TZ**
- Basic weight ····· 44 (ø10)
- Cylinder stroke····· 45 stroke
- Mounting bracket weight····· 8 (Single foot)

44 + 8 = **52 g**

Construction (Not able to disassemble)

Single acting, Spring return

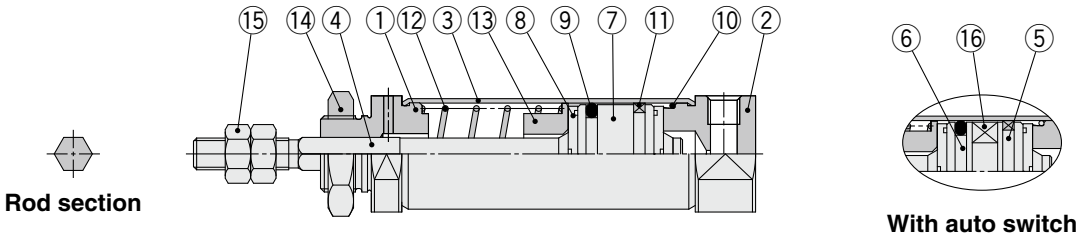

Single acting, Spring extend

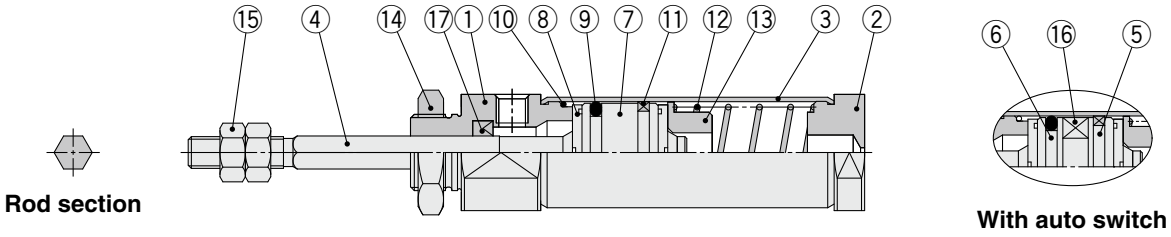

Component Parts

No.	Description	Material	Note
1	**Rod cover**	Aluminum alloy	
2	**Head cover**	Aluminum alloy	
3	**Cylinder tube**	Stainless steel	
4	**Piston rod**	Stainless steel	
5	**Piston A**	Aluminum alloy	
6	**Piston B**	Aluminum alloy	
7	**Piston**	Aluminum alloy	
8	**Bumper**	Urethane	
9	**Piston seal**	NBR	

No.	Description	Material	Note
10	**Tube gasket**	NBR	
11	**Wear ring**	Resin	
12	**Return spring**	Piano wire	
13	**Spring seat**	Aluminum alloy	
14	**Mounting nut**	Rolled steel	
15	**Rod end nut**	Rolled steel	
16	**Magnet**	—	
17	**Rod seal**	NBR	

Single Acting, Spring Return: Basic (B)

CJ2KB $\begin{matrix}10\\16\end{matrix}$ – Stroke S Head cover port location Z

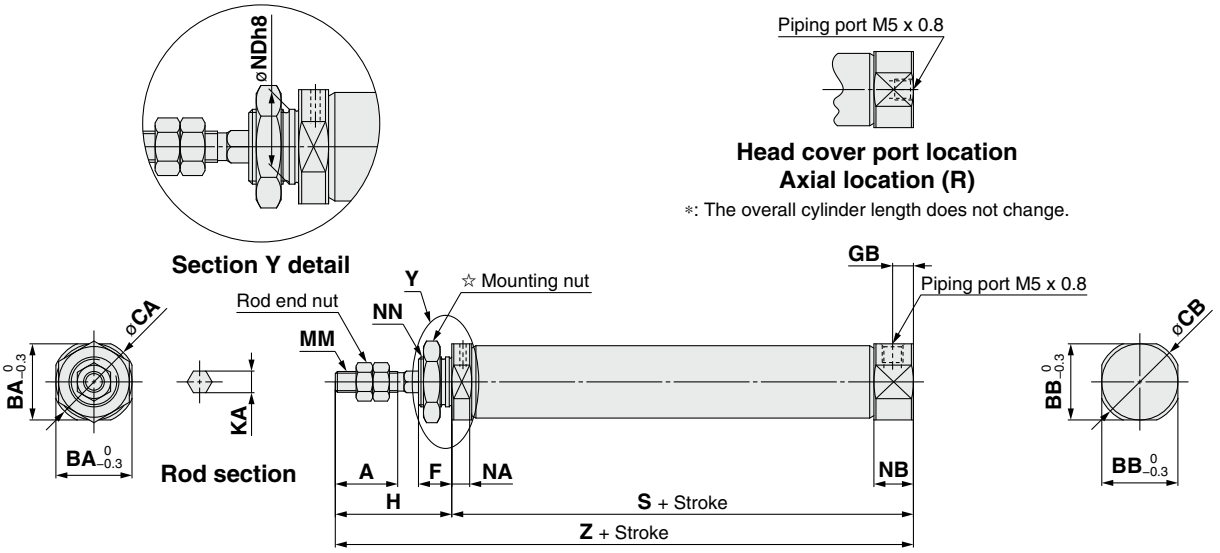

☆ For details of the mounting nut, refer to page 22.

[mm]

Bore size	A	BA	BB	CA	CB	F	GB	H	KA	MM	NA	NB	NDh8	NN	S								Z							
															5 to 15 st	16 to 30 st	31 to 45 st	46 to 60 st	61 to 75 st	76 to 100 st	101 to 125 st	126 to 150 st	5 to 15 st	16 to 30 st	31 to 45 st	46 to 60 st	61 to 75 st	76 to 100 st	101 to 125 st	126 to 150 st
10	15	15	12	17	14	8	5	28	4.2	M4 x 0.7	4.8	9.5	$10^{0}_{-0.022}$	M10 x 1.0	45.5	53	65	77	—	—	—	—	73.5	81	93	105	—	—	—	—
16	15	18.3	18.3	20	20	8	5	28	5.2	M5 x 0.8	4.8	9.5	$12^{0}_{-0.027}$	M12 x 1.0	45.5	54	66	78	84	108	126	138	73.5	82	94	106	112	136	154	166

Single Acting, Spring Return: Double-side Bossed (E)

CJ2KE $\begin{matrix}10\\16\end{matrix}$ – Stroke SZ

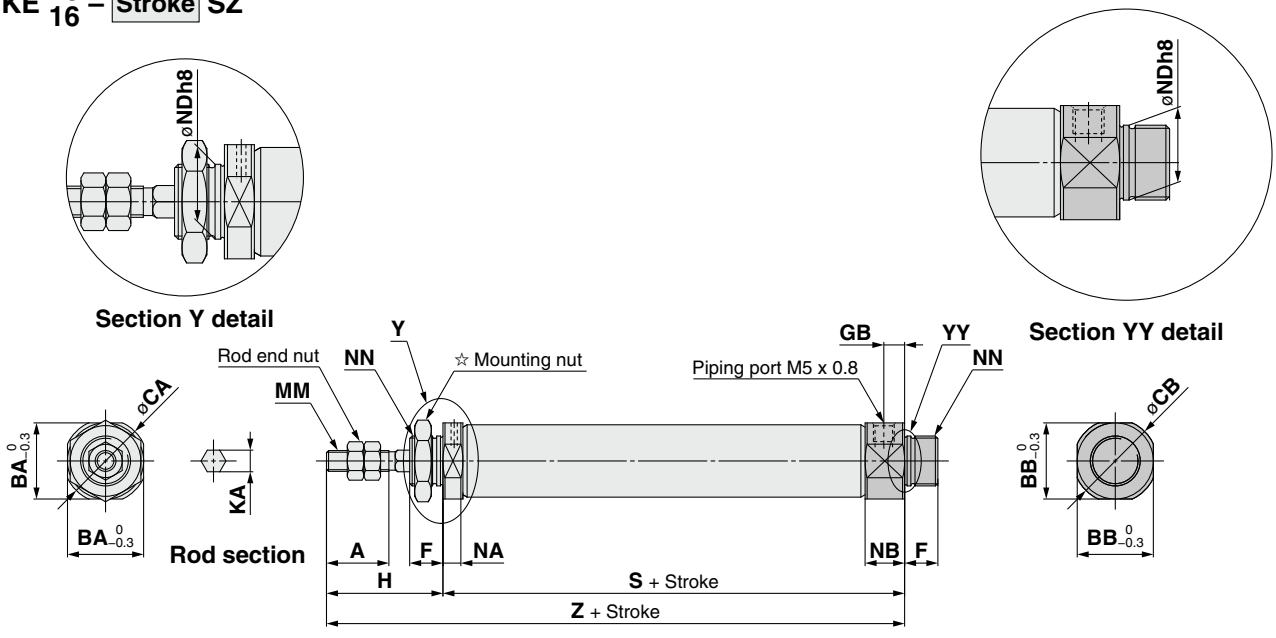

☆ For details of the mounting nut, refer to page 22.

[mm]

Bore size	A	BA	BB	CA	CB	F	GB	H	KA	MM	NA	NB	NDh8	NN	S								Z							
															5 to 15 st	16 to 30 st	31 to 45 st	46 to 60 st	61 to 75 st	76 to 100 st	101 to 125 st	126 to 150 st	5 to 15 st	16 to 30 st	31 to 45 st	46 to 60 st	61 to 75 st	76 to 100 st	101 to 125 st	126 to 150 st
10	15	15	15	17	17	8	5	28	4.2	M4 x 0.7	4.8	9.5	$10^{0}_{-0.022}$	M10 x 1.0	45.5	53	65	77	—	—	—	—	73.5	81	93	105	—	—	—	—
16	15	18.3	18.3	20	20	8	5	28	5.2	M5 x 0.8	4.8	9.5	$12^{0}_{-0.027}$	M12 x 1.0	45.5	54	66	78	84	108	126	138	73.5	82	94	106	112	136	154	166

Single Acting, Spring Return: Double Clevis (D)

CJ2KD 10/16 – Stroke SZ

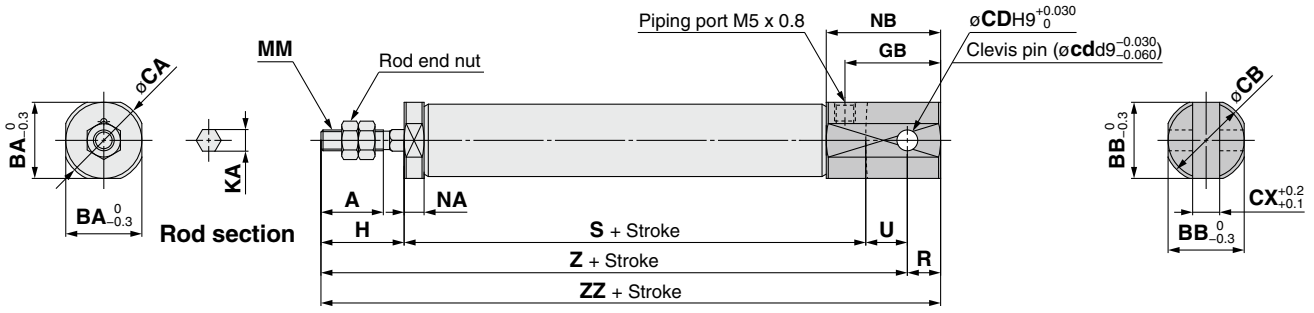

∗: A clevis pin and retaining rings are included.

[mm]

Bore size	A	BA	BB	CA	CB	CD (cd)	CX	GB	H	KA	MM	NA	NB	R	U	S							
																5 to 15 st	16 to 30 st	31 to 45 st	46 to 60 st	61 to 75 st	76 to 100 st	101 to 125 st	126 to 150 st
10	15	12	12	14	14	3.3	3.2	18	20	4.2	M4 x 0.7	4.8	22.5	5	8	45.5	53	65	77	—	—	—	—
16	15	18.3	18.3	20	20	5	6.5	23	20	5.2	M5 x 0.8	4.8	27.5	8	10	45.5	54	66	78	84	108	126	138

Bore size	Z								ZZ							
	5 to 15 st	16 to 30 st	31 to 45 st	46 to 60 st	61 to 75 st	76 to 100 st	101 to 125 st	126 to 150 st	5 to 15 st	16 to 30 st	31 to 45 st	46 to 60 st	61 to 75 st	76 to 100 st	101 to 125 st	126 to 150 st
10	73.5	81	93	105	—	—	—	—	78.5	86	98	110	—	—	—	—
16	75.5	84	96	108	114	138	156	168	83.5	92	104	116	122	146	164	176

Single Acting, Spring Return: Single Foot (L)

CJ2KL 10/16 – Stroke S Head cover port location Z

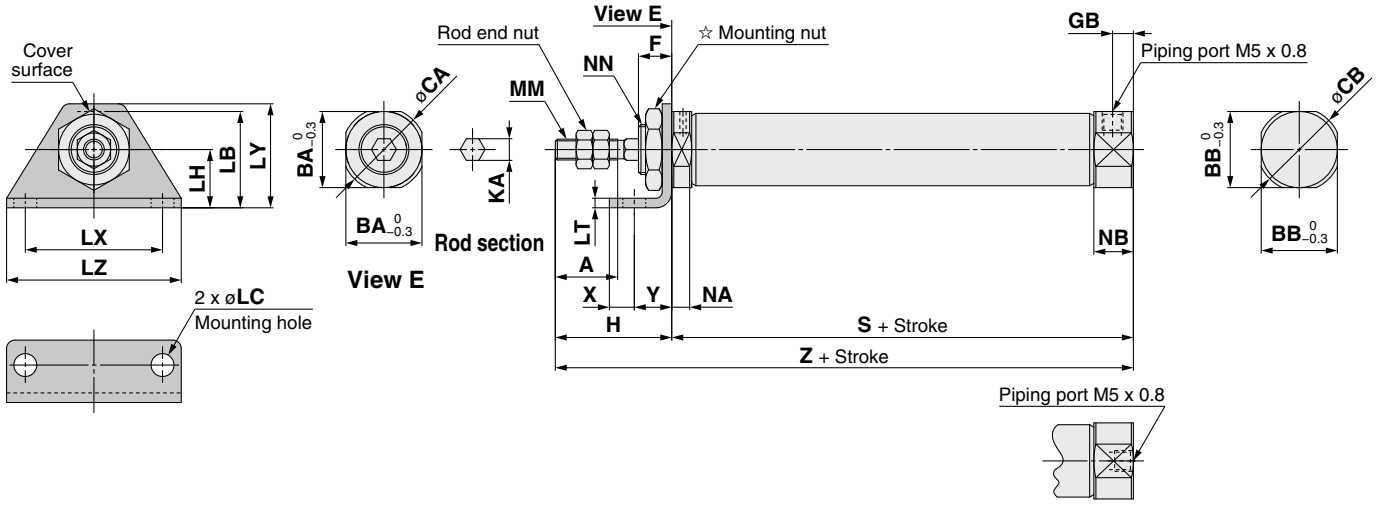

Head cover port location
Axial location (R)

∗: The overall cylinder length does not change.

☆ For details of the mounting nut, refer to page 22.

[mm]

Bore size	A	BA	BB	CA	CB	F	GB	H	KA	LB	LC	LH	LT	LX	LY	LZ	MM	NA	NB	NN
10	15	15	12	17	14	8	5	28	4.2	21.5	5.5	14	2.3	33	25	42	M4 x 0.7	4.8	9.5	M10 x 1.0
16	15	18.3	18.3	20	20	8	5	28	5.2	23	5.5	14	2.3	33	25	42	M5 x 0.8	4.8	9.5	M12 x 1.0

Bore size	S								X	Y	Z							
	5 to 15 st	16 to 30 st	31 to 45 st	46 to 60 st	61 to 75 st	76 to 100 st	101 to 125 st	126 to 150 st			5 to 15 st	16 to 30 st	31 to 45 st	46 to 60 st	61 to 75 st	76 to 100 st	101 to 125 st	126 to 150 st
10	45.5	53	65	77	—	—	—	—	6	9	73.5	81	93	105	—	—	—	—
16	45.5	54	66	78	84	108	126	138	6	9	73.5	82	94	106	112	136	154	166

Single Acting, Spring Return: Double Foot (M)

CJ2KM $\begin{matrix}10\\16\end{matrix}$ – Stroke SZ

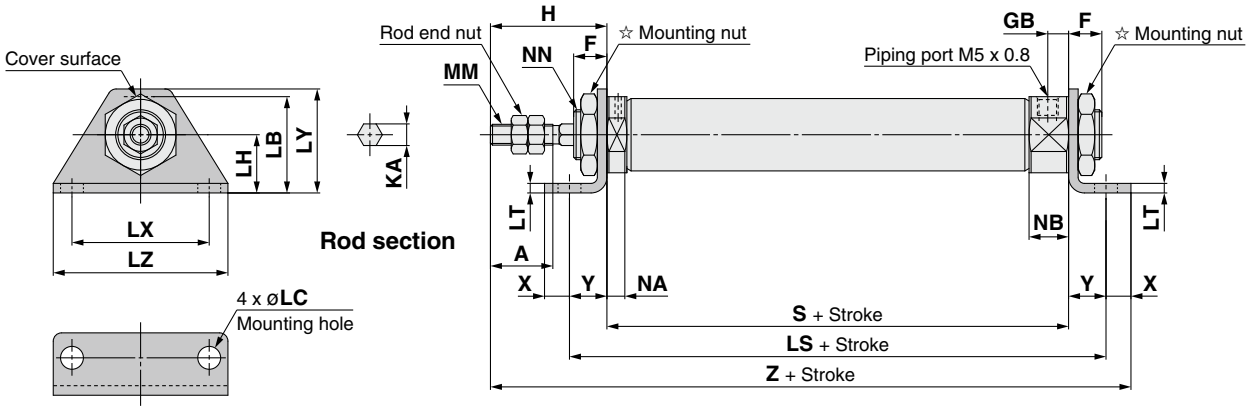

☆ For details of the mounting nut, refer to page 22.

[mm]

Bore size	A	F	GB	H	LB	LC	LH	LS								LT	LX	LY	LZ	KA	MM	NA	NB	NN
								5 to 15 st	16 to 30 st	31 to 45 st	46 to 60 st	61 to 75 st	76 to 100 st	101 to 125 st	126 to 150 st									
10	15	8	5	28	21.5	5.5	14	63.5	71	83	95	—	—	—	—	2.3	33	25	42	4.2	M4 x 0.7	4.8	9.5	M10 x 1.0
16	15	8	5	28	23	5.5	14	63.5	72	84	96	102	126	144	156	2.3	33	25	42	5.2	M5 x 0.8	4.8	9.5	M12 x 1.0

Bore size	S								X	Y	Z							
	5 to 15 st	16 to 30 st	31 to 45 st	46 to 60 st	61 to 75 st	76 to 100 st	101 to 125 st	126 to 150 st			5 to 15 st	16 to 30 st	31 to 45 st	46 to 60 st	61 to 75 st	76 to 100 st	101 to 125 st	126 to 150 st
10	45.5	53	65	77	—	—	—	—	6	9	88.5	96	108	120	—	—	—	—
16	45.5	54	66	78	84	108	126	138	6	9	88.5	97	109	121	127	151	169	181

Single Acting, Spring Return: Rod Flange (F)

CJ2KF $\begin{matrix}10\\16\end{matrix}$ – Stroke S Head cover port location Z

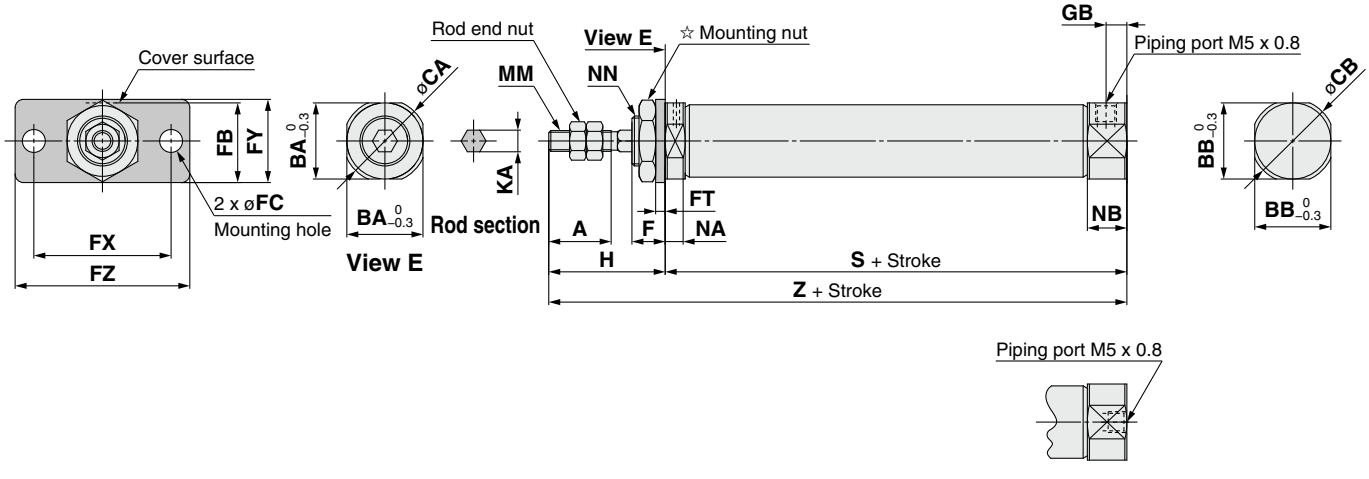

Head cover port location
Axial location (R)

∗: The overall cylinder length does not change.

☆ For details of the mounting nut, refer to page 22.

[mm]

Bore size	A	BA	BB	CA	CB	F	FB	FC	FT	FX	FY	FZ	GB	H	KA	MM	NA	NB	NN	S								Z							
																				5 to 15 st	16 to 30 st	31 to 45 st	46 to 60 st	61 to 75 st	76 to 100 st	101 to 125 st	126 to 150 st	5 to 15 st	16 to 30 st	31 to 45 st	46 to 60 st	61 to 75 st	76 to 100 st	101 to 125 st	126 to 150 st
10	15	15	12	17	14	8	17.5	5.5	2.3	33	20	42	5	28	4.2	M4 x 0.7	4.8	9.5	M10 x 1.0	45.5	53	65	77	—	—	—	—	73.5	81	93	105	—	—	—	—
16	15	18.3	18.3	20	20	8	19	5.5	2.3	33	20	42	5	28	5.2	M5 x 0.8	4.8	9.5	M12 x 1.0	45.5	54	66	78	84	108	126	138	73.5	82	94	106	112	136	154	166

Single Acting, Spring Return: Head Flange (G)

CJ2KG $\begin{matrix}10\\16\end{matrix}$ – Stroke SZ

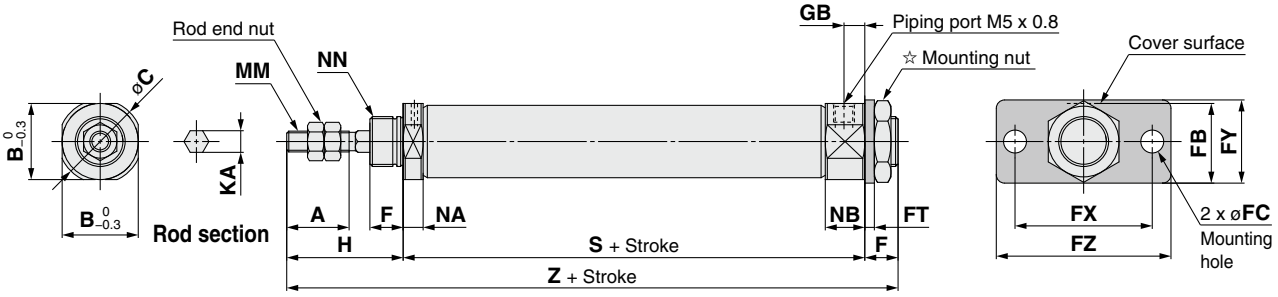

☆ For details of the mounting nut, refer to page 22.

[mm]

Bore size	A	B	C	F	FB	FC	FT	FX	FY	FZ	GB	H	KA	MM	NA	NB	NN
10	15	15	17	8	17.5	5.5	2.3	33	20	42	5	28	4.2	M4 x 0.7	4.8	9.5	M10 x 1.0
16	15	18.3	20	8	19	5.5	2.3	33	20	42	5	28	5.2	M5 x 0.8	4.8	9.5	M12 x 1.0

Bore size	S								Z							
	5 to 15 st	16 to 30 st	31 to 45 st	46 to 60 st	61 to 75 st	76 to 100 st	101 to 125 st	126 to 150 st	5 to 15 st	16 to 30 st	31 to 45 st	46 to 60 st	61 to 75 st	76 to 100 st	101 to 125 st	126 to 150 st
10	45.5	53	65	77	—	—	—	—	81.5	89	101	113	—	—	—	—
16	45.5	54	66	78	84	108	126	138	81.5	90	102	114	120	144	162	174

Single Acting, Spring Extend: Basic (B)

CJ2KB $\begin{matrix}10\\16\end{matrix}$ – Stroke TZ

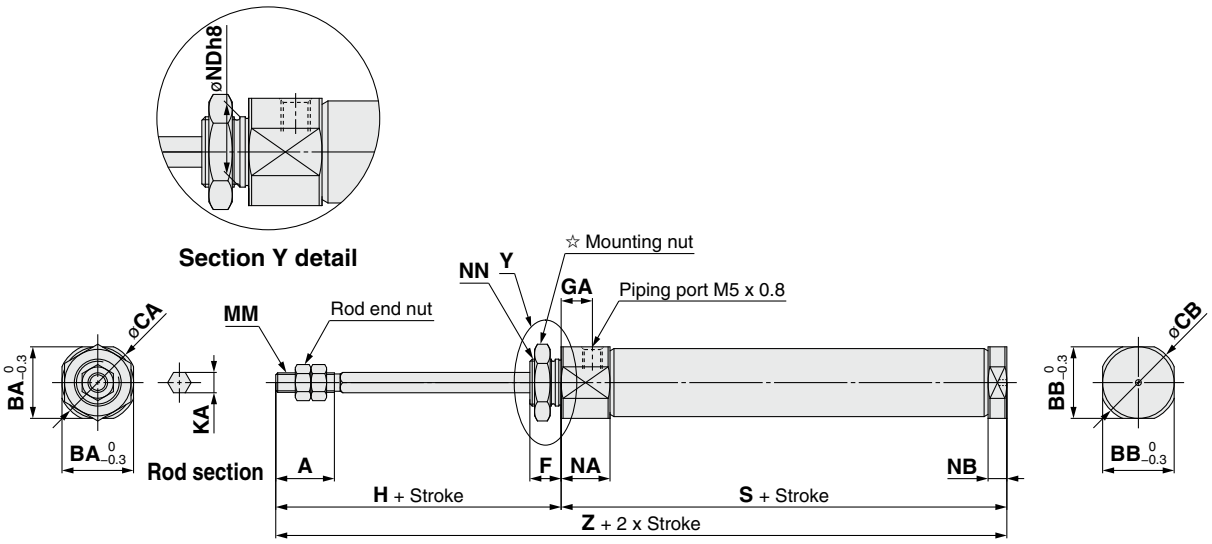

☆ For details of the mounting nut, refer to page 22.

[mm]

Bore size	A	BA	BB	CA	CB	F	GA	H	KA	MM	NA	NB	NDh8	NN	S								Z							
															5 to 15 st	16 to 30 st	31 to 45 st	46 to 60 st	61 to 75 st	76 to 100 st	101 to 125 st	126 to 150 st	5 to 15 st	16 to 30 st	31 to 45 st	46 to 60 st	61 to 75 st	76 to 100 st	101 to 125 st	126 to 150 st
10	15	15	12	17	14	8	8	28	4.2	M4 x 0.7	12.5	4.8	$10^{0}_{-0.022}$	M10 x 1.0	48.5	56	68	80	—	—	—	—	76.5	84	96	108	—	—	—	—
16	15	18.3	18.3	20	20	8	8	28	5.2	M5 x 0.8	12.5	4.8	$12^{0}_{-0.022}$	M12 x 1.0	48.5	57	69	81	87	111	129	141	76.5	85	97	109	115	139	157	169

Single Acting, Spring Extend: Double-side Bossed (E)

CJ2KE $\begin{matrix}10\\16\end{matrix}$ – Stroke TZ

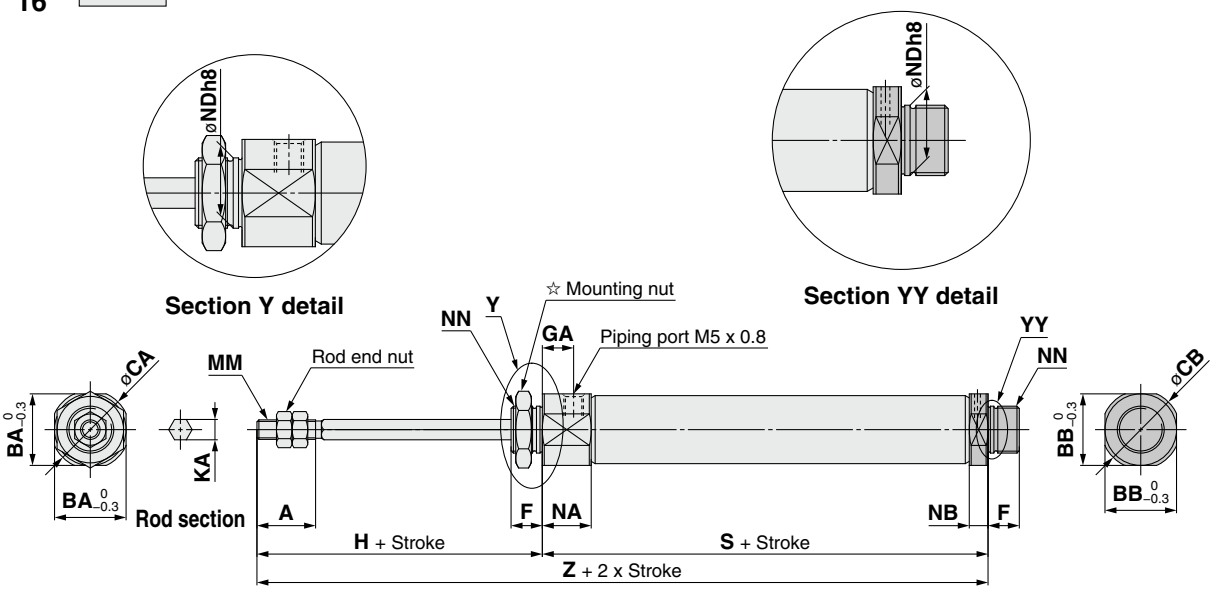

☆ For details of the mounting nut, refer to page 22.

[mm]

Bore size	A	BA	BB	CA	CB	F	GA	H	KA	MM	NA	NB	NDh8	NN	S								Z							
															5 to 15 st	16 to 30 st	31 to 45 st	46 to 60 st	61 to 75 st	76 to 100 st	101 to 125 st	126 to 150 st	5 to 15 st	16 to 30 st	31 to 45 st	46 to 60 st	61 to 75 st	76 to 100 st	101 to 125 st	126 to 150 st
10	15	15	15	17	17	8	8	28	4.2	M4 x 0.7	12.5	4.8	$10^{0}_{-0.022}$	M10 x 1.0	48.5	56	68	80	—	—	—	—	76.5	84	96	108	—	—	—	—
16	15	18.3	18.3	20	20	8	8	28	5.2	M5 x 0.8	12.5	4.8	$12^{0}_{-0.027}$	M12 x 1.0	48.5	57	69	81	87	111	129	141	76.5	85	97	109	115	139	157	169

Single Acting, Spring Extend: Double Clevis (D)

CJ2KD $\begin{matrix}10\\16\end{matrix}$ – Stroke TZ

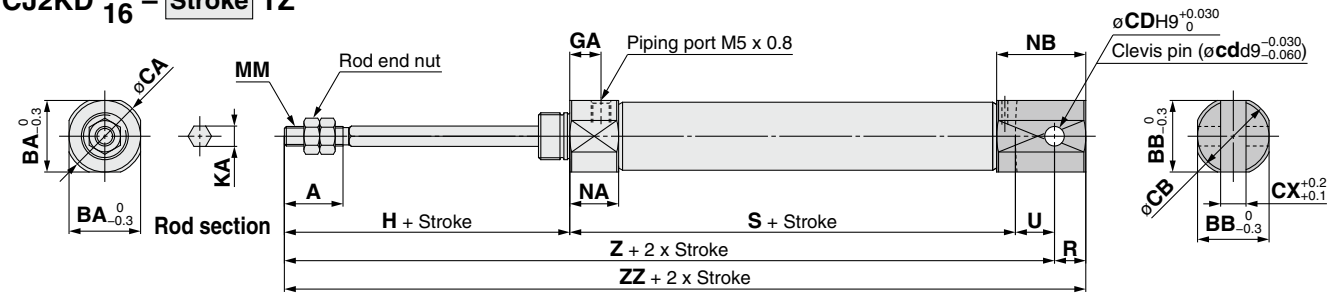

∗ A clevis pin and retaining rings are included.

[mm]

Bore size	A	BA	BB	CA	CB	CD (cd)	CX	GA	H	KA	MM	NA	NB	R	U	S							
																5 to 15 st	16 to 30 st	31 to 45 st	46 to 60 st	61 to 75 st	76 to 100 st	101 to 125 st	126 to 150 st
10	15	15	12	17	14	3.3	3.2	8	28	4.2	M4 x 0.7	12.5	17.8	5	8	48.5	56	68	80	—	—	—	—
16	15	18.3	18.3	20	20	5	6.5	8	28	5.2	M5 x 0.8	12.5	22.8	8	10	48.5	57	69	81	87	111	129	141

Bore size	Z								ZZ							
	5 to 15 st	16 to 30 st	31 to 45 st	46 to 60 st	61 to 75 st	76 to 100 st	101 to 125 st	126 to 150 st	5 to 15 st	16 to 30 st	31 to 45 st	46 to 60 st	61 to 75 st	76 to 100 st	101 to 125 st	126 to 150 st
10	84.5	92	104	116	—	—	—	—	89.5	97	109	121	—	—	—	—
16	86.5	95	107	119	125	149	167	179	94.5	103	115	127	133	157	175	187

Single Acting, Spring Extend: Single Foot (L)

CJ2KL $\begin{matrix}10\\16\end{matrix}$ – Stroke TZ

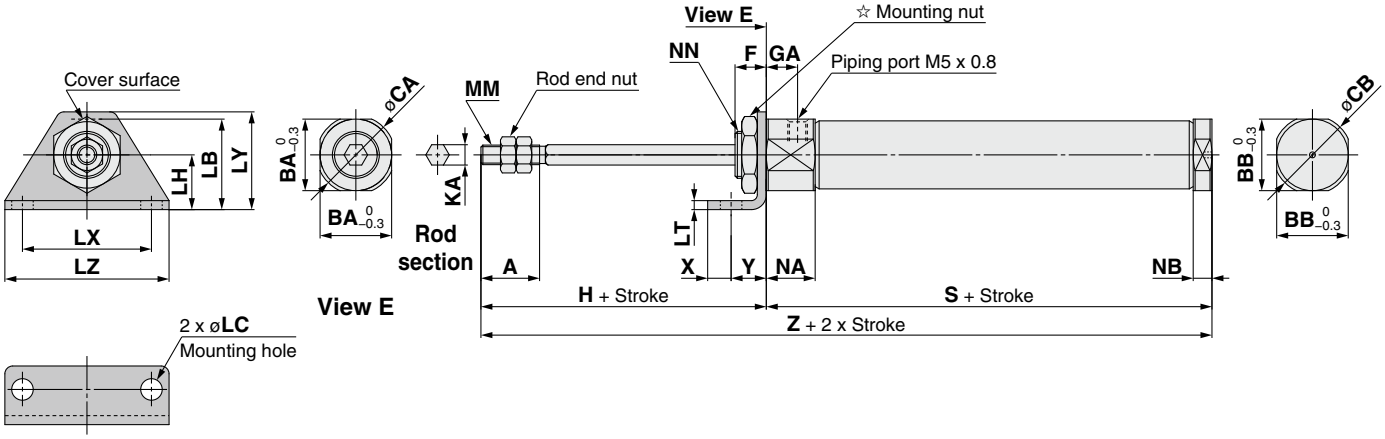

☆ For details of the mounting nut, refer to page 22.

[mm]

Bore size	A	BA	BB	CA	CB	F	GA	H	KA	LB	LC	LH	LT	LX	LY	LZ	MM	NA	NB	NN
10	15	15	12	17	14	8	8	28	4.2	21.5	5.5	14	2.3	33	25	42	M4 x 0.7	12.5	4.8	M10 x 1.0
16	15	18.3	18.3	20	20	8	8	28	5.2	23	5.5	14	2.3	33	25	42	M5 x 0.8	12.5	4.8	M12 x 1.0

Bore size	S								X	Y	Z							
	5 to 15 st	16 to 30 st	31 to 45 st	46 to 60 st	61 to 75 st	76 to 100 st	101 to 125 st	126 to 150 st			5 to 15 st	16 to 30 st	31 to 45 st	46 to 60 st	61 to 75 st	76 to 100 st	101 to 125 st	126 to 150 st
10	48.5	56	68	80	—	—	—	—	6	9	76.5	84	96	108	—	—	—	—
16	48.5	57	69	81	87	111	129	141	6	9	76.5	85	97	109	115	139	157	169

Single Acting, Spring Extend: Double Foot (M)

CJ2KM $\begin{matrix}10\\16\end{matrix}$ – Stroke TZ

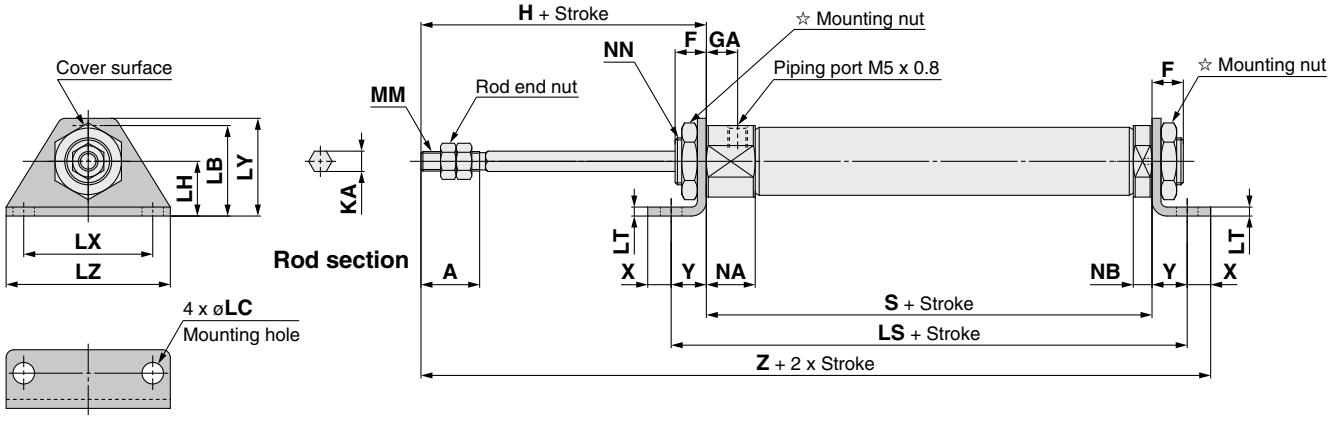

☆ For details of the mounting nut, refer to page 22.

[mm]

Bore size	A	F	GA	H	KA	LB	LC	LH	LS 5 to 15 st	LS 16 to 30 st	LS 31 to 45 st	LS 46 to 60 st	LS 61 to 75 st	LS 76 to 100 st	LS 101 to 125 st	LS 126 to 150 st	LT	LX	LY	LZ	MM	NA	NB	NN
10	15	8	8	28	4.2	21.5	5.5	14	66.5	74	86	98	—	—	—	—	2.3	33	25	42	M4 x 0.7	12.5	4.8	M10 x 1.0
16	15	8	8	28	5.2	23	5.5	14	66.5	75	87	99	105	129	147	159	2.3	33	25	42	M5 x 0.8	12.5	4.8	M12 x 1.0

Bore size	S 5 to 15 st	S 16 to 30 st	S 31 to 45 st	S 46 to 60 st	S 61 to 75 st	S 76 to 100 st	S 101 to 125 st	S 126 to 150 st	X	Y	Z 5 to 15 st	Z 16 to 30 st	Z 31 to 45 st	Z 46 to 60 st	Z 61 to 75 st	Z 76 to 100 st	Z 101 to 125 st	Z 126 to 150 st
10	48.5	56	68	80	—	—	—	—	6	9	91.5	99	111	123	—	—	—	—
16	48.5	57	69	81	87	111	129	141	6	9	91.5	100	112	124	130	154	172	184

Single Acting, Spring Extend: Rod Flange (F)

CJ2KF $\begin{matrix}10\\16\end{matrix}$ – Stroke TZ

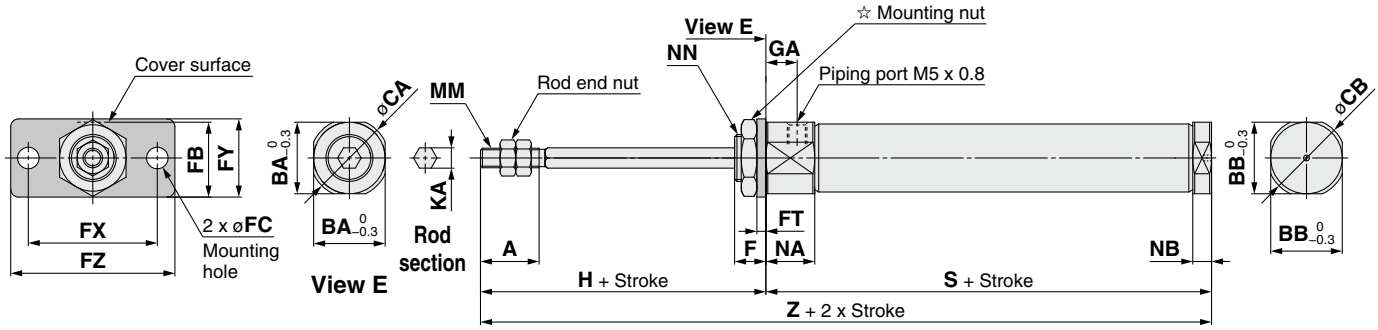

☆ For details of the mounting nut, refer to page 22.

[mm]

Bore size	A	BA	BB	CA	CB	F	FB	FC	FT	FX	FY	FZ	GA	H	KA	MM	NA	NB	NN
10	15	15	12	17	14	8	17.5	5.5	2.3	33	20	42	8	28	4.2	M4 x 0.7	12.5	4.8	M10 x 1.0
16	15	18.3	18.3	20	20	8	19	5.5	2.3	33	20	42	8	28	5.2	M5 x 0.8	12.5	4.8	M12 x 1.0

Bore size	S 5 to 15 st	S 16 to 30 st	S 31 to 45 st	S 46 to 60 st	S 61 to 75 st	S 76 to 100 st	S 101 to 125 st	S 126 to 150 st	Z 5 to 15 st	Z 16 to 30 st	Z 31 to 45 st	Z 46 to 60 st	Z 61 to 75 st	Z 76 to 100 st	Z 101 to 125 st	Z 126 to 150 st
10	48.5	56	68	80	—	—	—	—	76.5	84	96	108	—	—	—	—
16	48.5	57	69	81	87	111	129	141	76.5	85	97	109	115	139	157	169

Single Acting, Spring Extend: Head Flange (G)

CJ2KG $^{10}_{16}$ – Stroke TZ

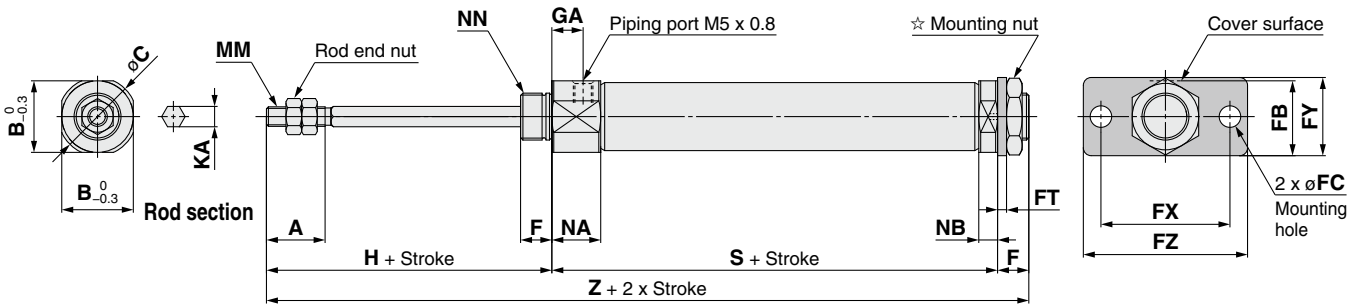

☆ For details of the mounting nut, refer to page 22.

[mm]

Bore size	A	B	C	F	FB	FC	FT	FX	FY	FZ	GA	H	KA	MM	NA	NB	NN
10	15	15	17	8	17.5	5.5	2.3	33	20	42	8	28	4.2	M4 x 0.7	12.5	4.8	M10 x 1.0
16	15	18.3	20	8	19	5.5	2.3	33	20	42	8	28	5.2	M5 x 0.8	12.5	4.8	M12 x 1.0

Bore size	S								Z							
	5 to 15 st	16 to 30 st	31 to 45 st	46 to 60 st	61 to 75 st	76 to 100 st	101 to 125 st	126 to 150 st	5 to 15 st	16 to 30 st	31 to 45 st	46 to 60 st	61 to 75 st	76 to 100 st	101 to 125 st	126 to 150 st
10	48.5	56	68	80	—	—	—	—	84.5	92	104	116	—	—	—	—
16	48.5	57	69	81	87	111	129	141	84.5	93	105	117	123	147	165	177

Air Cylinder: Built-in Speed Controller Type
Double Acting, Single Rod
Series CJ2Z
ø10, ø16

RoHS

How to Order

Bore size

10	10 mm
16	16 mm

Cylinder standard stroke [mm]
Refer to "Standard Strokes" on page 67.

CJ2Z B 16 – 60 Z –

With auto switch CDJ2Z B 16 – 60 Z – M9BW – B –

With auto switch (Built-in magnet)

Mounting

B	Basic
E	Double-side bossed
D	Double clevis
L	Single foot
M	Double foot
F	Rod flange
G	Head flange

∗: Foot/Flange brackets are shipped together with the product, but not assembled.

Head cover port location

Nil	Perpendicular to axis	
R	Axial	

Pivot bracket

Nil	None
N	Pivot bracket is shipped together with the product, but not assembled.

∗: Only for CJ2D (double clevis)
∗: Pivot bracket is shipped together with the product, but not assembled.

Rod end bracket

Nil	None
V	Single knuckle joint
W	Double knuckle joint
T	Rod end cap (Flat type)
U	Rod end cap (Round type)

∗: Rod end bracket is shipped together with the product, but not assembled.
∗: A knuckle joint pin is not provided with the single knuckle joint.

Auto switch

Nil	Without auto switch

∗: For applicable auto switches, refer to the table below.
★ Enter the auto switch mounting type (A or B) even when a built-in magnet cylinder without an auto switch is required.

Auto switch mounting type

A	Rail mounting
B	Band mounting

∗: For rail mounting, screws and nuts for 2 auto switches come with the rail.
∗: Refer to page 107 for auto switch mounting brackets.

Number of auto switches

Nil	2 pcs.
S	1 pc.
n	"n" pcs.

Made to Order
Refer to page 67 for details.

∗: For double clevis, the product is perpendicular to the cylinder axis.
∗: For double-side bossed, the product is perpendicular to the cylinder axis.

∗: **Refer to "Ordering Example of Cylinder Assembly" on page 67.**

Applicable Auto Switches/Refer to the **WEB catalog** or the Best Pneumatics No. 2 for further information on auto switches.

Type	Special function	Electrical entry	Indicator light	Wiring (Output)	Load voltage DC	Load voltage AC	Auto switch model: Band mounting Perpendicular	Band mounting In-line	Rail mounting Perpendicular	Rail mounting In-line	Lead wire length [m] 0.5 (Nil)	1 (M)	3 (L)	5 (Z)	None (N)	Pre-wired connector	Applicable load	
Solid state auto switch	—	Grommet	Yes	3-wire (NPN)	5 V, 12 V	—	M9NV	M9N	M9NV	M9N	●	●	●	○	—	○	IC circuit	Relay, PLC
				3-wire (PNP)			M9PV	M9P	M9PV	M9P	●	●	●	○	—	○		
				2-wire	12 V		M9BV	M9B	M9BV	M9B	●	●	●	○	—	○	—	
		Connector					—	H7C	J79C	—	●	—	●	●	●	—		
	Diagnostic indication (2-color indicator)	Grommet		3-wire (NPN)	5 V, 12 V		M9NWV	M9NW	M9NWV	M9NW	●	●	●	○	—	○	IC circuit	
				3-wire (PNP)			M9PWV	M9PW	M9PWV	M9PW	●	●	●	○	—	○		
				2-wire	12 V		M9BWV	M9BW	M9BWV	M9BW	●	●	●	○	—	○	—	
	Water resistant (2-color indicator)			3-wire (NPN)	5 V, 12 V		M9NAV∗1	M9NA∗1	M9NAV∗1	M9NA∗1	○	○	●	○	—	○	IC circuit	
				3-wire (PNP)			M9PAV∗1	M9PA∗1	M9PAV∗1	M9PA∗1	○	○	●	○	—	○		
				2-wire	12 V		M9BAV∗1	M9BA∗1	M9BAV∗1	M9BA∗1	○	○	●	○	—	○	—	
	With diagnostic output (2-color indicator)			4-wire (NPN)	5 V, 12 V		—	H7NF	—	F79F	●	—	●	○	—	○	IC circuit	
Reed auto switch	—	Grommet	Yes	3-wire (NPN equivalent)	—	5 V	—	A96V	A96	A96V	A96	●	—	●	—	—	—	IC circuit	—
				2-wire		—	200 V	—	—	A72	A72H	●	—	●	—	—	—	—	Relay, PLC
			No		24 V	12 V	100 V	A93V∗2	A93	A93V∗2	A93	●	●	●	●	—	—		
							100 V or less	A90V	A90	A90V	A90	●	—	●	—	—	—	IC circuit	
		Connector	Yes				—	—	C73C	A73C	—	●	—	●	●	●	—	—	
			No				24 V or less	—	C80C	A80C	—	●	—	●	●	●	—	IC circuit	
	Diagnostic indication (2-color indicator)	Grommet	Yes		—	—	—	—	A79W	—	●	—	●	—	—	—	—	

∗1: Water resistant type auto switches can be mounted on the above models, but in such case SMC cannot guarantee water resistance. Please contact SMC regarding water resistant types with the above model numbers.
∗2: 1 m type lead wire is only applicable to D-A93.

∗: Lead wire length symbols: 0.5 m····· Nil (Example) M9NW
1 m····· M (Example) M9NWM
3 m····· L (Example) M9NWL
5 m····· Z (Example) M9NWZ
None····· N (Example) H7CN

∗: Since there are other applicable auto switches than listed, refer to page 108 for details.
∗: For details about auto switches with pre-wired connector, refer to the **WEB catalog** or the Best Pneumatics No. 2.
∗: Solid state auto switches marked with "○" are produced upon receipt of order.
∗: The D-A9□□/M9□□□/A7□□/A80□/F7□□/J7□□ auto switches are shipped together, (but not assembled). (For band mounting, only auto switch mounting brackets are assembled before being shipped.)

Space-saving air cylinder with speed controller built-in cylinder cover

Symbol

Double acting, Single rod, Rubber bumper

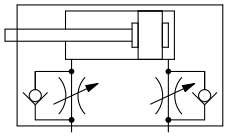

Made to Order

Made to Order

(For details, refer to pages 111 to 120.)

Symbol	Specifications
-XA□	Change of rod end shape
-XC51	With hose nipple
-XC85	Grease for food processing equipment
-X446	PTFE grease

⚠ Precautions

Refer to page 121 before handling.

Ordering Example of Cylinder Assembly

Cylinder model: CDJ2ZD16-60Z-NW-M9BW-B

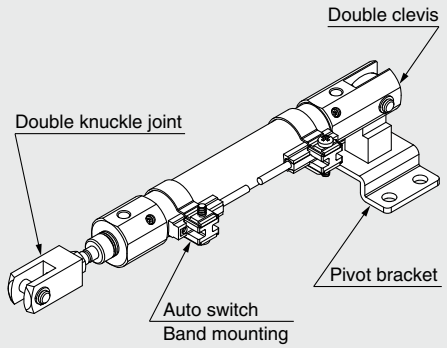

Mounting D: Double clevis
Pivot bracket N: Yes
Rod end bracket W: Double knuckle joint
Auto switch D-M9BW: 2 pcs.
Auto switch mounting B: Band mounting

∗: Pivot bracket, double knuckle joint and auto switch are shipped together with the product, but not assembled.

Specifications

Bore size [mm]	10	16
Action	Double acting, Single rod	
Fluid	Air	
Proof pressure	1 MPa	
Maximum operating pressure	0.7 MPa	
Minimum operating pressure	0.06 MPa	
Ambient and fluid temperature	Without auto switch: –10°C to 70°C With auto switch: –10°C to 60°C (No freezing)	
Cushion	Rubber bumper	
Lubrication	Not required (Non-lube)	
Stroke length tolerance	$^{+1.0}_{0}$	
Speed controller	Built-in	
Piston speed	50 to 750 mm/s	
Allowable kinetic energy	0.035 J	0.090 J

Standard Strokes

[mm]

Bore size	Standard stroke	Maximum manufacturable stroke
10	15, 30, 45, 60, 75, 100, 125, 150	400
16	15, 30, 45, 60, 75, 100, 125, 150, 175, 200	400

∗: Manufacture of intermediate strokes in 1 mm increments is possible. (Spacers are not used.)
∗: Applicable strokes should be confirmed according to the usage. For details, refer to "Air Cylinders Model Selection" on front matter pages of the Best Pneumatics No. 2 or the **WEB catalog**. In addition, the products that exceed the standard stroke might not be able to fulfill the specifications due to the deflection etc.

Mounting and Accessories

/Refer to page 22 for details about part numbers and dimensions.

●···Mounted on the product. ○···Can be ordered within the cylinder model.

Mounting		Basic	Foot	Flange	Double∗1 clevis	Double clevis (including T-bracket)
Standard	Mounting nut	●	●	●	—	—
	Rod end nut	●	●	●	●	●
	Clevis pin	—	—	—	●	●
Option	Single knuckle joint	○	○	○	○	○
	Double knuckle joint∗1	○	○	○	○	○
	Rod end cap (Flat/Round type)	○	○	○	○	○
	T-bracket	—	—	—	○	●

∗1: A pin and retaining rings are shipped together with double clevis and double knuckle joint.

Mounting Brackets/Part No.

Mounting bracket	Bore size [mm]	
	10	**16**
Foot	CJ-L010C	CJ-L016C
Flange	CJ-F010C	CJ-F016C
T-bracket∗1	CJ-T010C	CJ-T016C

∗1: T-bracket is used with double clevis (D).

Refer to pages 101 to 108 for cylinders with auto switches.

- Auto switch proper mounting position (detection at stroke end) and its mounting height
- Minimum stroke for auto switch mounting
- Operating range
- Auto switch mounting brackets/Part no.

Weights

[g]

Bore size [mm]		10	16
Basic weight (When the stroke is zero)	Basic	36	61
	Axial piping	36	61
	Double clevis (including clevis pin)	40	68
	Head-side bossed	37	63
Additional weight per 15 mm of stroke		4	7
Mounting bracket weight	Single foot	8	25
	Double foot	16	50
	Rod flange	5	13
	Head flange	5	13
Accessories	Single knuckle joint	17	23
	Double knuckle joint (including knuckle pin)	25	21
	Rod end cap (Flat type)	1	2
	Rod end cap (Round type)	1	2
	T-bracket	32	50

∗: Mounting nut and rod end nut are included in the basic weight.
∗: Mounting nut is not included in the basic weight for the double clevis.

Calculation:
Example) **CJ2ZL10-45Z**

- Basic weight ····· 36 (ø10)
- Additional weight ····· 4/15 stroke
- Cylinder stroke ····· 45 stroke
- Mounting bracket weight ··· 8 (Single foot)

36 + 4/15 x 45 + 8 = **56 g**

Construction (Not able to disassemble)

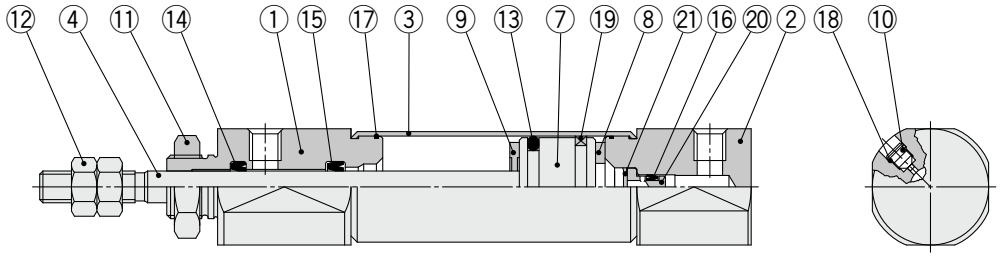

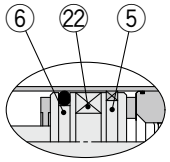

With auto switch

Component Parts

No.	Description	Material	Note
1	**Rod cover**	Aluminum alloy	
2	**Head cover**	Aluminum alloy	
3	**Cylinder tube**	Stainless steel	
4	**Piston rod**	Stainless steel	
5	**Piston A**	Aluminum alloy	
6	**Piston B**	Aluminum alloy	
7	**Piston**	Aluminum alloy	
8	**Bumper A**	Urethane	
9	**Bumper B**	Urethane	
10	**Speed controller needle**	Carbon steel	
11	**Mounting nut**	Rolled steel	

No.	Description	Material	Note
12	**Rod end nut**	Rolled steel	
13	**Piston seal**	NBR	
14	**Rod seal**	NBR	
15	**Check seal A**	NBR	
16	**Check seal B**	NBR	
17	**Tube gasket**	NBR	
18	**Needle seal**	NBR	
19	**Wear ring**	Resin	
20	**Check seal sleeve**	Aluminum alloy	
21	**Retaining ring**	Carbon tool steel	
22	**Magnet**	—	

Basic (B)

CJ2ZB $\begin{matrix}10\\16\end{matrix}$ – Stroke Head cover port location Z

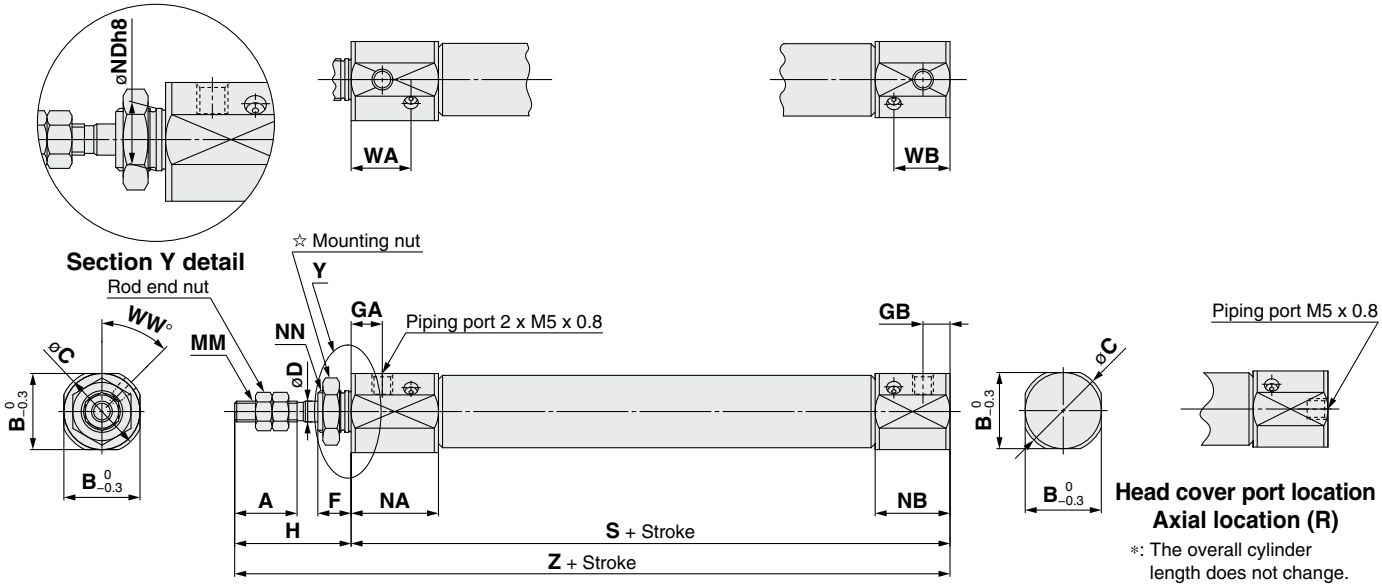

☆ For details of the mounting nut, refer to page 22.

[mm]

Bore size	A	B	C	D	F	GA	GB	H	MM	NA	NB	NDh8	NN	WA	WB	WW	S	Z
10	15	15	17	4	8	7.5	6.5	28	M4 x 0.7	21	18	$8^{0}_{-0.022}$	M8 x 1.0	14.4	13.5	45	63	91
16	15	18.3	20	5	8	7.5	6.5	28	M5 x 0.8	21	18	$10^{0}_{-0.022}$	M10 x 1.0	14.4	13.5	45	64	92

Double-side Bossed (E)

CJ2ZE $\begin{matrix}10\\16\end{matrix}$ – Stroke Z

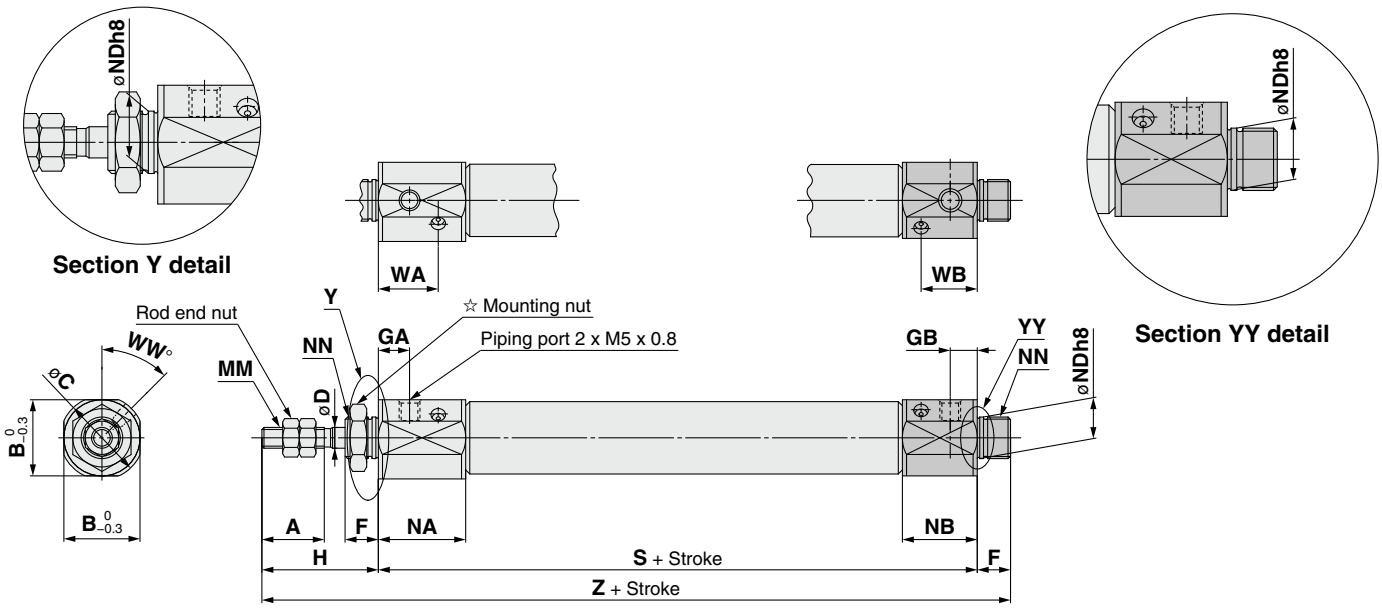

☆ For details of the mounting nut, refer to page 22.

[mm]

Bore size	A	B	C	D	F	GA	GB	H	MM	NA	NB	NDh8	NN	WA	WB	WW	S	Z
10	15	15	17	4	8	7.5	6.5	28	M4 x 0.7	21	18	$8^{0}_{-0.022}$	M8 x 1.0	14.4	13.5	45	63	99
16	15	18.3	20	5	8	7.5	6.5	28	M5 x 0.8	21	18	$10^{0}_{-0.022}$	M10 x 1.0	14.4	13.5	45	64	100

Double Clevis (D)

CJ2ZD $\begin{matrix}10\\16\end{matrix}$ – Stroke Z

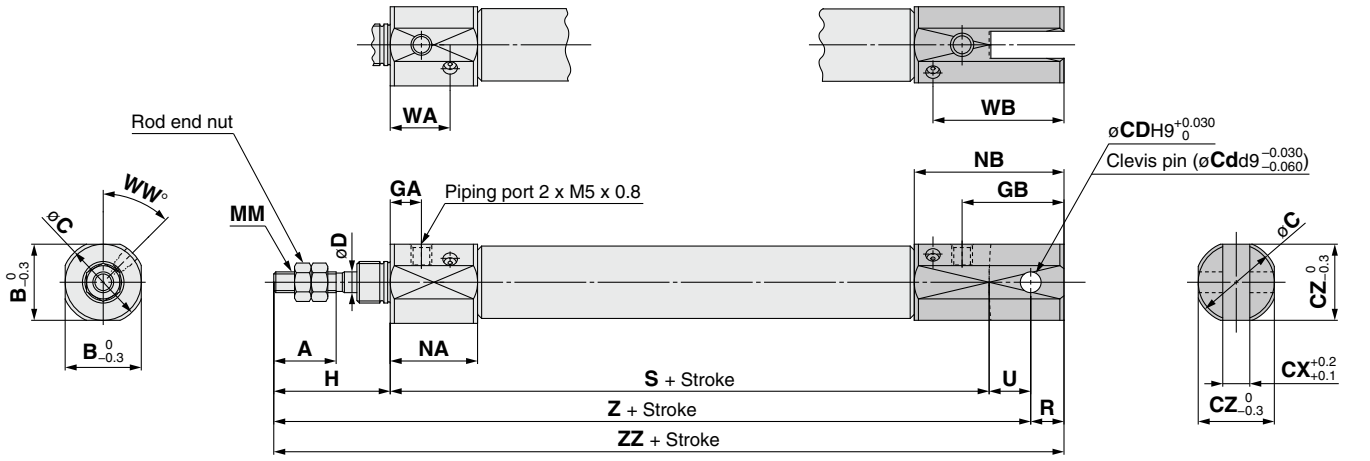

∗: A clevis pin and retaining rings are included.

[mm]

Bore size	A	B	C	CD	CX	CZ	D	GA	GB	H	MM	NA	NB	R	U	WA	WB	WW	S	Z	ZZ
10	15	15	17	3.3	3.2	15	4	7.5	19.5	28	M4 x 0.7	21	31	5	8	14.4	26.5	45	63	99	104
16	15	18.3	20	5	6.5	18.3	5	7.5	24.5	28	M5 x 0.8	21	36	8	10	14.4	31.5	45	64	102	110

Single Foot (L)

CJ2ZL $\begin{matrix}10\\16\end{matrix}$ – Stroke Head cover port location Z

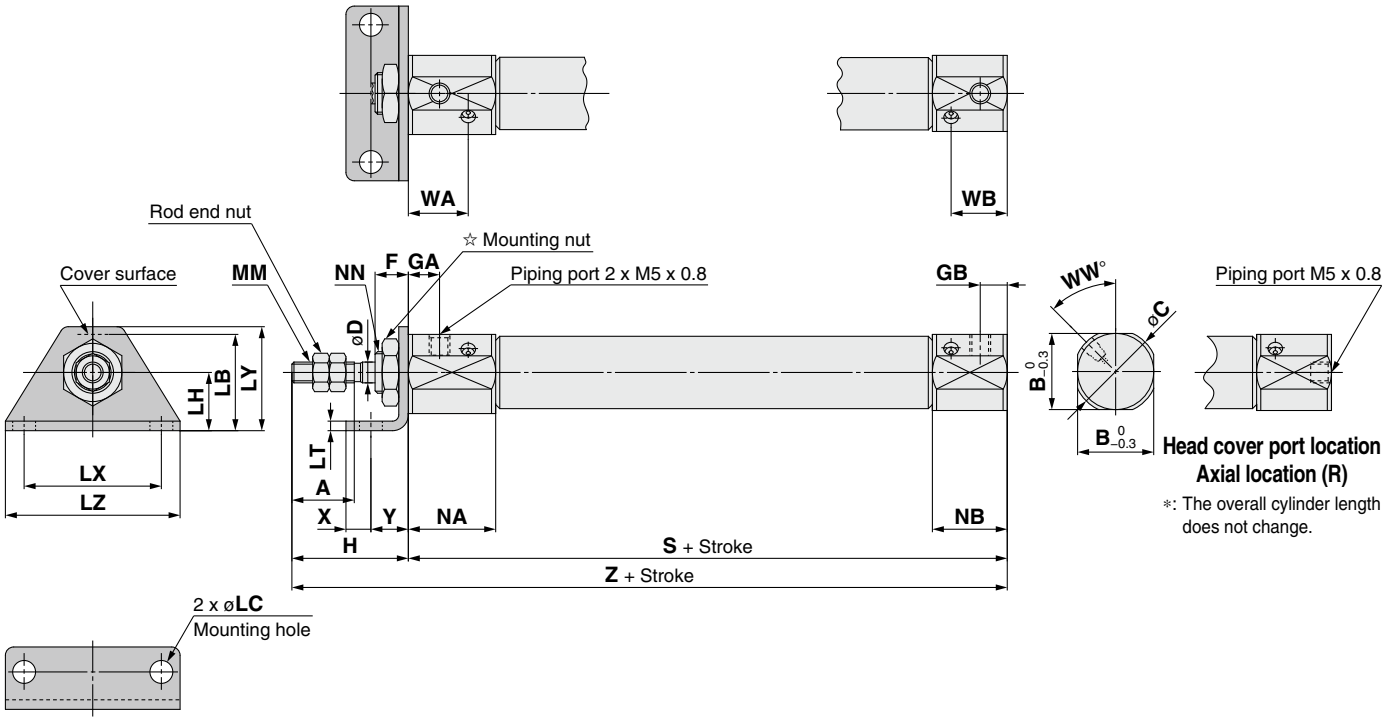

☆ For details of the mounting nut, refer to page 22.

[mm]

Bore size	A	B	C	D	F	GA	GB	H	LB	LC	LH	LT	LX	LY	LZ	MM	NA	NB	NN	WA	WB	WW	S	X	Y	Z
10	15	15	17	4	8	7.5	6.5	28	15	4.5	9	1.6	24	16.5	32	M4 x 0.7	21	18	M8 x 1.0	14.4	13.5	45	63	5	7	91
16	15	18.3	20	5	8	7.5	6.5	28	23	5.5	14	2.3	33	25	42	M5 x 0.8	21	18	M10 x 1.0	14.4	13.5	45	64	6	9	92

Double Foot (M)

CJ2ZM $\begin{matrix}10\\16\end{matrix}$ – Stroke Z

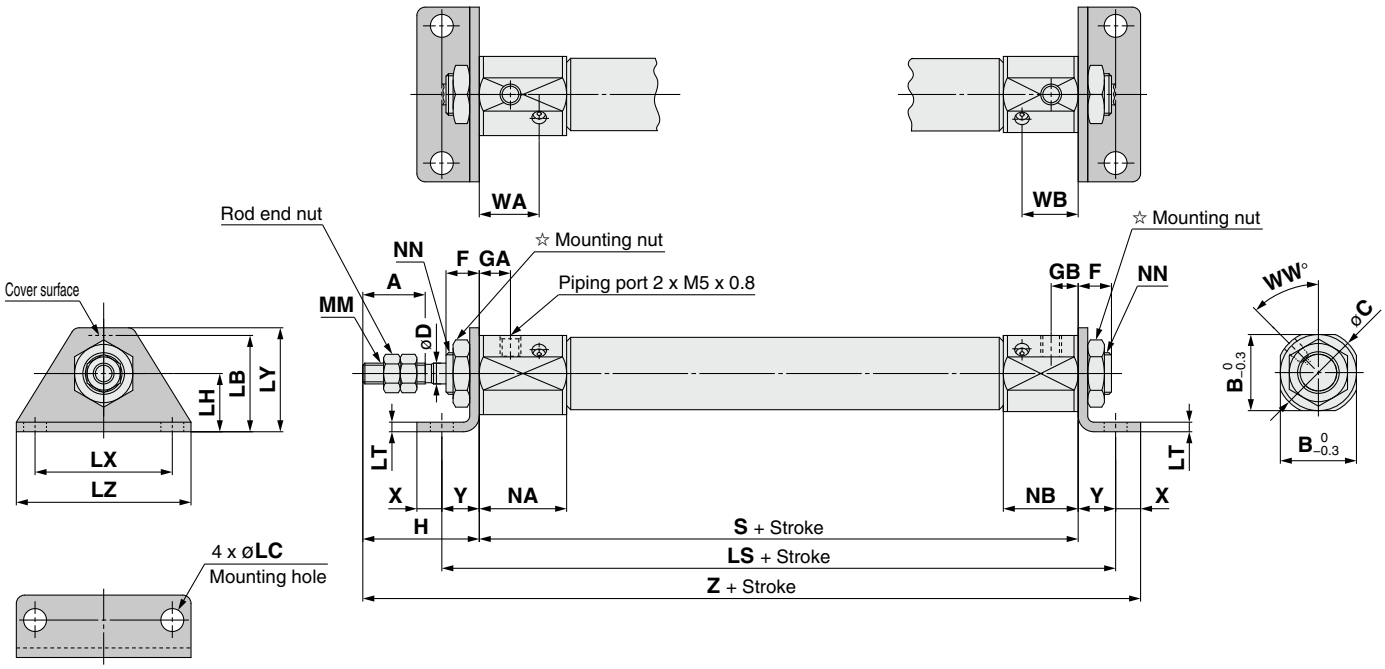

☆ For details of the mounting nut, refer to page 22.

[mm]

Bore size	A	B	C	D	F	GA	GB	H	LB	LC	LH	LS	LT	LX	LY	LZ	MM	NA	NB	NN	WA	WB	WW	S	X	Y	Z
10	15	15	17	4	8	7.5	6.5	28	15	4.5	9	77	1.6	24	16.5	32	M4 x 0.7	21	18	M8 x 1.0	14.4	13.5	45	63	5	7	103
16	15	18.3	20	5	8	7.5	6.5	28	23	5.5	14	82	2.3	33	25	42	M5 x 0.8	21	18	M10 x 1.0	14.4	13.5	45	64	6	9	107

Rod Flange (F)

CJ2ZF $\begin{matrix}10\\16\end{matrix}$ – Stroke Head cover port location Z

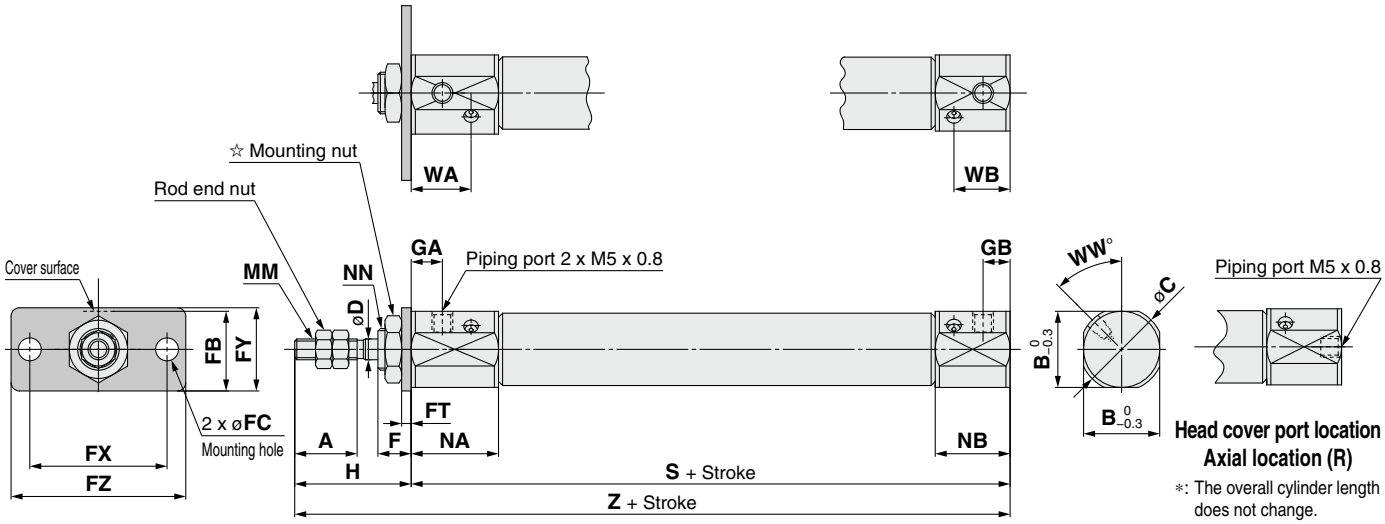

☆ For details of the mounting nut, refer to page 22.

[mm]

Bore size	A	B	C	D	F	FB	FC	FT	FX	FY	FZ	GA	GB	H	MM	NA	NB	NN	WA	WB	WW	S	Z
10	15	15	17	4	8	13	4.5	1.6	24	14	32	7.5	6.5	28	M4 x 0.7	21	18	M8 x 1.0	14.4	13.5	45	63	91
16	15	18.3	20	5	8	19	5.5	2.3	33	20	42	7.5	6.5	28	M5 x 0.8	21	18	M10 x 1.0	14.4	13.5	45	64	92

Head Flange (G)

CJ2ZG $\begin{matrix}10\\16\end{matrix}$ – Stroke Z

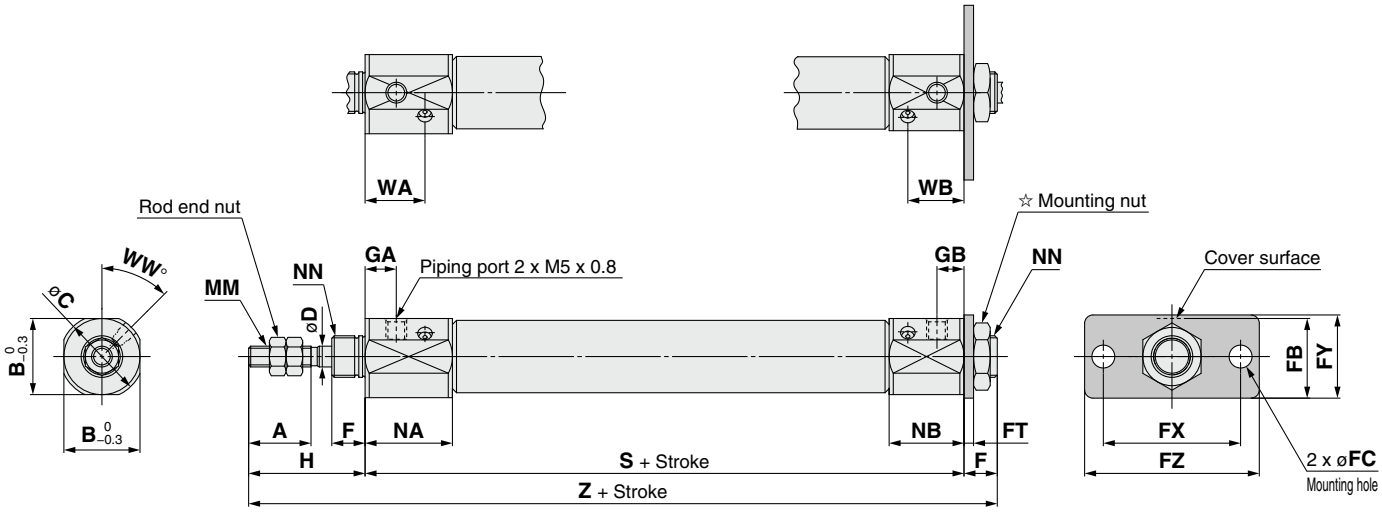

☆ For details of the mounting nut, refer to page 22.

[mm]

Bore size	A	B	C	D	F	FB	FC	FT	FX	FY	FZ	GA	GB	H	MM	NA	NB	NN	WA	WB	WW	S	Z
10	15	15	17	4	8	13	4.5	1.6	24	14	32	7.5	6.5	28	M4 x 0.7	21	18	M8 x 1.0	14.4	13.5	45	63	99
16	15	18.3	20	5	8	19	5.5	2.3	33	20	42	7.5	6.5	28	M5 x 0.8	21	18	M10 x 1.0	14.4	13.5	45	64	100

Air Cylinder: Built-in Speed Controller Type
Double Acting, Double Rod
Series CJ2ZW

RoHS

ø10, ø16

How to Order

CJ2ZW **B** **16** – **60** **Z** – ☐

With auto switch **CDJ2ZW** **L** **16** – **60** **Z** – **M9BW** ☐ – **B** – ☐

With auto switch (Built-in magnet)

Mounting

B	Basic
L	Foot
F	Flange

∗: Foot/Flange brackets are shipped together with the product, but not assembled.

Bore size

10	10 mm
16	16 mm

Cylinder standard stroke [mm]
Refer to "Standard Strokes" on page 74.

Auto switch

Nil	Without auto switch

∗: For applicable auto switches, refer to the table below.
★ Enter the auto switch mounting type (A or B) even when a built-in magnet cylinder without an auto switch is required.

Number of auto switches

Nil	2 pcs.
S	1 pc.
n	"n" pcs.

Auto switch mounting type

A	Rail mounting
B	Band mounting

∗: For rail mounting, screws and nuts for 2 auto switches come with the rail.
∗: Refer to page 107 for auto switch mounting brackets.

Made to Order
Refer to page 74 for details.

Applicable Auto Switches/Refer to the **WEB catalog** or the Best Pneumatics No. 2 for further information on auto switches.

Type	Special function	Electrical entry	Indicator light	Wiring (Output)	Load voltage DC	Load voltage AC	Auto switch model: Band mounting Perpendicular	Band mounting In-line	Rail mounting Perpendicular	Rail mounting In-line	Lead wire length [m] 0.5 (Nil)	1 (M)	3 (L)	5 (Z)	None (N)	Pre-wired connector	Applicable load	
Solid state auto switch	—	Grommet	Yes	3-wire (NPN)	5 V,12 V	—	M9NV	M9N	M9NV	M9N	●	●	●	○	—	○	IC circuit	Relay, PLC
				3-wire (PNP)			M9PV	M9P	M9PV	M9P	●	●	●	○	—	○		
				2-wire	12 V		M9BV	M9B	M9BV	M9B	●	●	●	○	—	○	—	
		Connector					—	H7C	J79C	—	●	—	●	●	●	—		
	Diagnostic indication (2-color indicator)	Grommet		3-wire (NPN)	5 V,12 V		M9NWV	M9NW	M9NWV	M9NW	●	●	●	○	—	○	IC circuit	
				3-wire (PNP)			M9PWV	M9PW	M9PWV	M9PW	●	●	●	○	—	○		
				2-wire	12 V		M9BWV	M9BW	M9BWV	M9BW	●	●	●	○	—	○	—	
	Water resistant (2-color indicator)			3-wire (NPN)	5 V,12 V		M9NAV∗1	M9NA∗1	M9NAV∗1	M9NA∗1	○	○	●	○	—	○	IC circuit	
				3-wire (PNP)			M9PAV∗1	M9PA∗1	M9PAV∗1	M9PA∗1	○	○	●	○	—	○		
				2-wire	12 V		M9BAV∗1	M9BA∗1	M9BAV∗1	M9BA∗1	○	○	●	○	—	○	—	
	With diagnostic output (2-color indicator)			4-wire (NPN)	5 V,12 V		—	H7NF	—	F79F	●	—	●	○	—	○	IC circuit	
Reed auto switch	—	Grommet	Yes	3-wire (NPN equivalent)	—	5 V	—	A96V	A96	A96V	A96	●	—	●	—	—	—	IC circuit	—
				2-wire		—	200 V	—	—	A72	A72H	●	—	●	—	—	—	—	Relay, PLC
					24 V	12 V	100 V	A93V∗2	A93	A93V∗2	A93	●	●	●	●	—	—		
			No				100 V or less	A90V	A90	A90V	A90	●	—	●	—	—	—	IC circuit	
			Yes				—	—	C73C	A73C	—	●	—	●	●	●	—	—	
		Connector	No				24 V or less	—	C80C	A80C	—	●	—	●	●	●	—	IC circuit	
	Diagnostic indication (2-color indicator)	Grommet	Yes		—	—	—	—	A79W	—	●	—	●	—	—	—	—	

∗1: Water resistant type auto switches can be mounted on the above models, but in such case SMC cannot guarantee water resistance. Please contact SMC regarding water resistant types with the above model numbers.
∗2: 1 m type lead wire is only applicable to D-A93.
∗: Lead wire length symbols: 0.5 m····· Nil (Example) M9NW
1 m····· M (Example) M9NWM
3 m····· L (Example) M9NWL
5 m····· Z (Example) M9NWZ
None····· N (Example) H7CN

∗: Since there are other applicable auto switches than listed, refer to page 108 for details.
∗: For details about auto switches with pre-wired connector, refer to the **WEB catalog** or the Best Pneumatics No. 2.
∗: Solid state auto switches marked with "○" are produced upon receipt of order.
∗: The D-A9□□/M9□□□/A7□□/A80□/F7□□/J7□□ auto switches are shipped together, (but not assembled). (For band mounting, only auto switch mounting brackets are assembled before being shipped.)

Space-saving air cylinder with speed controller built-in cylinder cover

Symbol

Double acting, Double rod, Rubber bumper

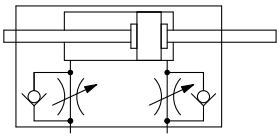

Made to Order
(For details, refer to pages 111 and 120.)

Symbol	Specifications
-XA□	Change of rod end shape
-XC51	With hose nipple
-XC85	Grease for food processing equipment
-X446	PTFE grease

⚠ Precautions

Refer to page 121 before handling.

Specifications

Bore size [mm]	10	16
Action	Double acting, Double rod	
Fluid	Air	
Proof pressure	1 MPa	
Maximum operating pressure	0.7 MPa	
Minimum operating pressure	0.1 MPa	
Ambient and fluid temperature	Without auto switch: –10°C to 70°C With auto switch: –10°C to 60°C (No freezing)	
Cushion	Rubber bumper	
Lubrication	Not required (Non-lube)	
Stroke length tolerance	$^{+1.0}_{0}$	
Speed controller	Built-in	
Piston speed	50 to 750 mm/s	
Allowable kinetic energy	0.035 J	0.090 J

Standard Strokes

[mm]

Bore size	Standard stroke
10	15, 30, 45, 60, 75, 100, 125, 150
16	15, 30, 45, 60, 75, 100, 125, 150, 175, 200

∗: Manufacture of intermediate strokes in 1 mm increments is possible. (Spacers are not used.)
∗: Please consult with SMC for strokes which exceed the standard stroke length.
∗: Applicable strokes should be confirmed according to the usage. For details, refer to “Air Cylinders Model Selection” on front matter pages of the Best Pneumatics No. 2 or the **WEB catalog**. In addition, the products that exceed the standard stroke might not be able to fulfill the specifications due to the deflection etc.

Mounting and Accessories /Refer to page 22 for details about part numbers and dimensions.

●···Mounted on the product. ○···Please order separately.

Mounting		Basic	Foot	Flange
Standard	Mounting nut	●	●	●
	Rod end nut	●	●	●
Option	Single knuckle joint	○	○	○
	Double knuckle joint∗1	○	○	○

∗1: A knuckle pin and retaining rings are shipped together with double knuckle joint.

Mounting Brackets/Part No.

Mounting bracket	Bore size [mm]	
	10	**16**
Foot	CJ-L010C	CJ-L016C
Flange	CJ-F010C	CJ-F016C

Refer to pages 101 to 108 for cylinders with auto switches.

- Auto switch proper mounting position (detection at stroke end) and its mounting height
- Minimum stroke for auto switch mounting
- Operating range
- Auto switch mounting brackets/Part no.

Weights

[g]

Bore size [mm]		10	16
Basic weight (When the stroke is zero)	Basic	36	61
Additional weight per 15 mm of stroke		4.5	7.5
Mounting bracket weight	Double foot	16	50
	Head flange	5	13
Accessories	Single knuckle joint	17	23
	Double knuckle joint (including knuckle pin)	25	21
	Rod end cap (Flat type)	1	2
	Rod end cap (Round type)	1	2

∗: Mounting nut and rod end nut are included in the basic weight.
Calculation:
Example) **CJ2ZWL10-45Z**

- Basic weight ·····36 (ø10)
- Additional weight ·····4.5/15 stroke
- Cylinder stroke·····45 stroke
- Mounting bracket weight···16 (Double foot)

36 + 4.5/15 x 45 + 16 = **65.5 g**

Construction (Not able to disassemble)

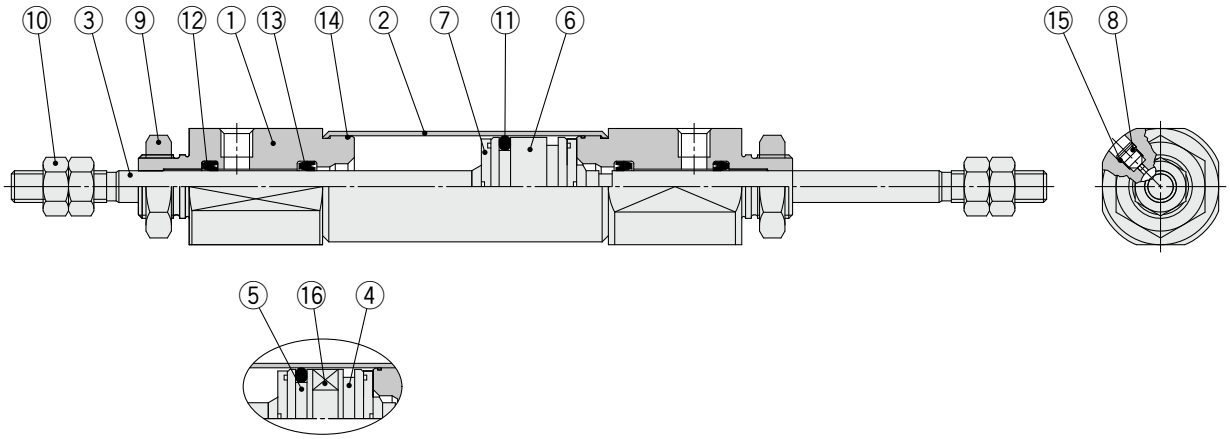

With auto switch

Component Parts

No.	Description	Material	Note
1	**Rod cover**	Aluminum alloy	
2	**Cylinder tube**	Stainless steel	
3	**Piston rod**	Stainless steel	
4	**Piston A**	Aluminum alloy	
5	**Piston B**	Aluminum alloy	
6	**Piston**	Aluminum alloy	
7	**Bumper**	Urethane	
8	**Speed controller needle**	Carbon steel	

No.	Description	Material	Note
9	**Mounting nut**	Rolled steel	
10	**Rod end nut**	Rolled steel	
11	**Piston seal**	NBR	
12	**Rod seal**	NBR	
13	**Check seal**	NBR	
14	**Tube gasket**	NBR	
15	**Needle seal**	NBR	
16	**Magnet**	—	

Basic (B)

CJ2ZWB $\begin{matrix}10\\16\end{matrix}$ – Stroke Z

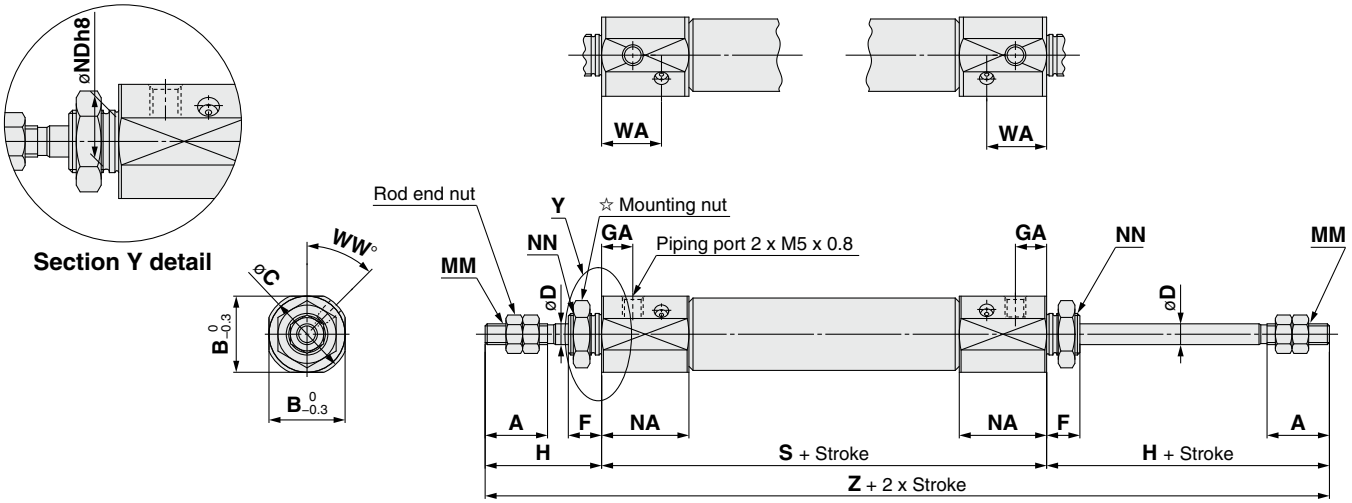

☆ For details of the mounting nut, refer to page 22.

[mm]

Bore size	A	B	C	D	F	GA	H	MM	NA	NDh8	NN	WA	WW	S	Z
10	15	15	17	4	8	7.5	28	M4 x 0.7	21	$8^{0}_{-0.022}$	M8 x 1.0	14.4	45	66	122
16	15	18.3	20	5	8	7.5	28	M5 x 0.8	21	$10^{0}_{-0.022}$	M10 x 1.0	14.4	45	67	123

Foot (L)

CJ2ZWL $\begin{matrix}10\\16\end{matrix}$ – Stroke Z

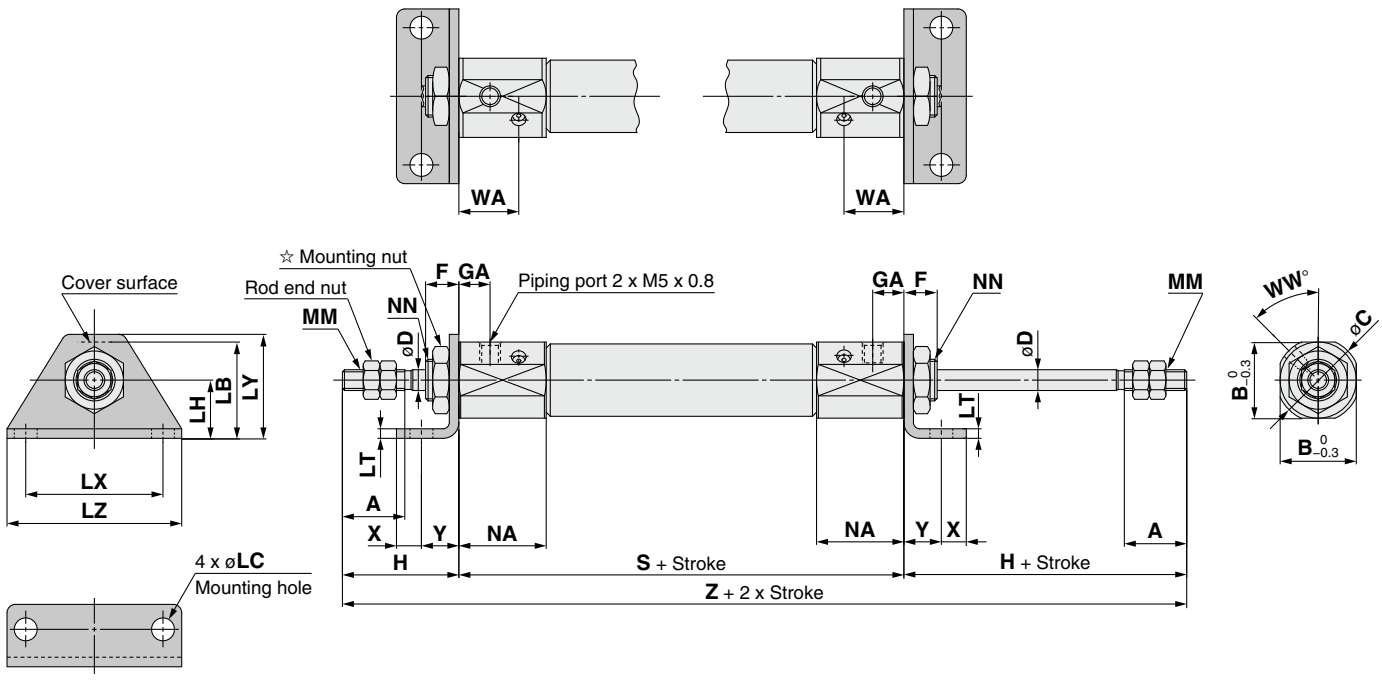

☆ For details of the mounting nut, refer to page 22.

[mm]

Bore size	A	B	C	D	F	GA	H	LB	LC	LH	LT	LX	LY	LZ	NN	NA	NN	WA	WW	S	X	Y	Z
10	15	15	17	4	8	7.5	28	15	4.5	9	1.6	24	16.5	32	M4 x 0.7	21	M8 x 1.0	14.4	45	66	5	7	122
16	15	18.3	20	5	8	7.5	28	23	5.5	14	2.3	33	25	42	M5 x 0.8	21	M10 x 1.0	14.4	45	67	6	9	123

Flange (F)

CJ2ZWF $\begin{matrix}10\\16\end{matrix}$ – Stroke Z

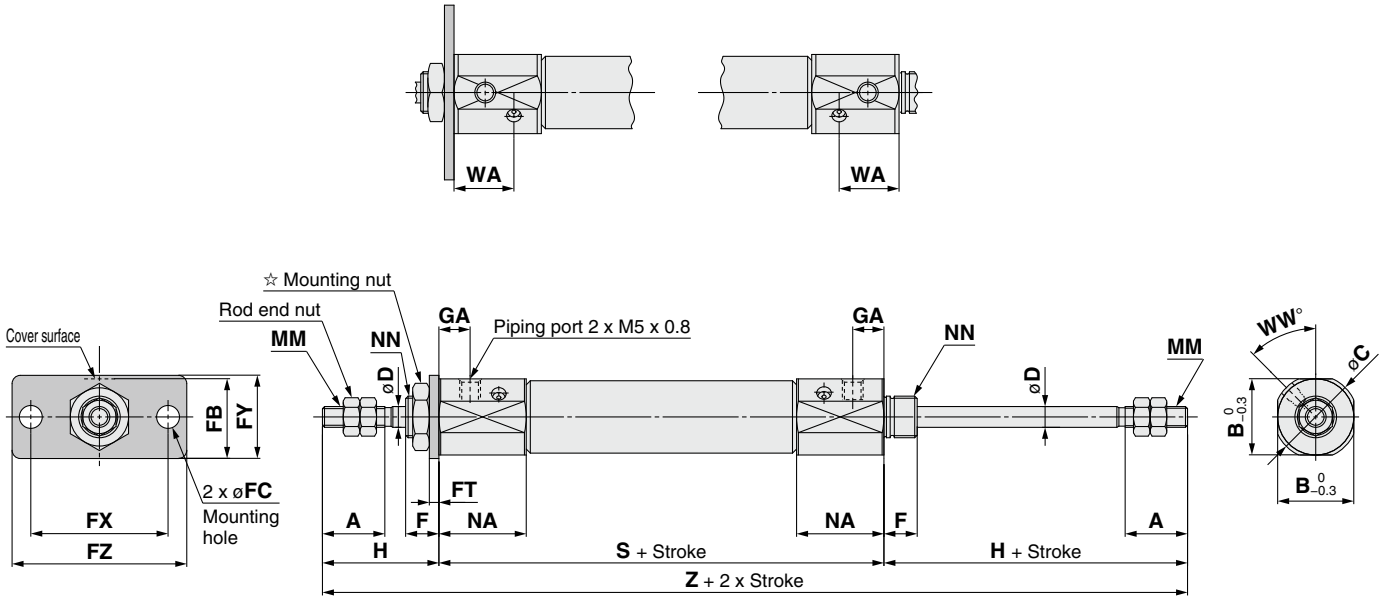

☆ For details of the mounting nut, refer to page 22.

[mm]

Bore size	A	B	C	D	F	FB	FC	FT	FX	FY	FZ	GA	H	MM	NA	NN	WA	WW	S	Z
10	15	15	17	4	8	13	4.5	1.6	24	14	32	7.5	28	M4 x 0.7	21	M8 x 1.0	14.4	45	66	122
16	15	18.3	20	5	8	19	5.5	2.3	33	20	42	7.5	28	M5 x 0.8	21	M10 x 1.0	14.4	45	67	123

Air Cylinder: Direct Mount Type
Double Acting, Single Rod
Series CJ2R
ø10, ø16

RoHS

How to Order

Cylinder standard stroke [mm]
Refer to "Standard Strokes" on page 79.

CJ2RA **16** – **60** □ **Z** – □ – □

With auto switch **CDJ2R**A **16** – **60** □ **Z** – □ – **M9BW** □ – **B** – □

With auto switch
(Built-in magnet)

Mounting

A	Bottom mounting

Bore size

10	10 mm
16	16 mm

Head cover port location

Nil	Perpendicular to axis	
R	Axial	

Auto switch

Nil	Without auto switch

∗: For applicable auto switches, refer to the table below.

★ Enter the auto switch mounting type (A or B) even when a built-in magnet cylinder without an auto switch is required.

Rod end bracket

Nil	None
V	Single knuckle joint
W	Double knuckle joint
T	Rod end cap (Flat type)
U	Rod end cap (Round type)

∗: Rod end bracket is shipped together with the product, but not assembled.
∗: A knuckle joint pin is not provided with the single knuckle joint.

Made to Order
Refer to page 79 for details.

Auto switch mounting type

A	Rail mounting
B	Band mounting

∗: For rail mounting, screws and nuts for 2 auto switches come with the rail.
∗: Refer to page 107 for auto switch mounting brackets.

Number of auto switches

Nil	2 pcs.
S	1 pc.
n	"n" pcs.

∗: **Refer to "Ordering Example of Cylinder Assembly" on page 79.**

Applicable Auto Switches/Refer to the **WEB catalog** or the Best Pneumatics No. 2 for further information on auto switches.

Type	Special function	Electrical entry	Indicator light	Wiring (Output)	Load voltage DC	Load voltage AC	Auto switch model: Band mounting Perpendicular	Band mounting In-line	Rail mounting Perpendicular	Rail mounting In-line	Lead wire length [m] 0.5 (Nil)	1 (M)	3 (L)	5 (Z)	None (N)	Pre-wired connector	Applicable load	
Solid state auto switch	——	Grommet	Yes	3-wire (NPN)	5 V, 12 V	—	**M9NV**	**M9N**	**M9NV**	**M9N**	●	●	●	○	—	○	IC circuit	Relay, PLC
				3-wire (PNP)			**M9PV**	**M9P**	**M9PV**	**M9P**	●	●	●	○	—	○		
				2-wire	12 V		**M9BV**	**M9B**	**M9BV**	**M9B**	●	●	●	○	—	○	—	
		Connector					—	**H7C**	**J79C**	—	●	—	●	●	●	—		
	Diagnostic indication (2-color indicator)	Grommet		3-wire (NPN)	5 V, 12 V		**M9NWV**	**M9NW**	**M9NWV**	**M9NW**	●	●	●	○	—	○	IC circuit	
				3-wire (PNP)			**M9PWV**	**M9PW**	**M9PWV**	**M9PW**	●	●	●	○	—	○		
				2-wire	12 V		**M9BWV**	**M9BW**	**M9BWV**	**M9BW**	●	●	●	○	—	○	—	
	Water resistant (2-color indicator)			3-wire (NPN)	5 V, 12 V		**M9NAV**∗1	**M9NA**∗1	**M9NAV**∗1	**M9NA**∗1	○	○	●	○	—	○	IC circuit	
				3-wire (PNP)			**M9PAV**∗1	**M9PA**∗1	**M9PAV**∗1	**M9PA**∗1	○	○	●	○	—	○		
				2-wire	12 V		**M9BAV**∗1	**M9BA**∗1	**M9BAV**∗1	**M9BA**∗1	○	○	●	○	—	○	—	
	With diagnostic output (2-color indicator)			4-wire (NPN)	5 V, 12 V		—	**H7NF**	—	**F79F**	●	—	●	○	—	○	IC circuit	
Reed auto switch	——	Grommet	Yes	3-wire (NPN equivalent)	—	5 V	—	**A96V**	**A96**	**A96V**	**A96**	●	—	●	—	—	—	IC circuit	—
				2-wire		—	200 V	—	—	**A72**	**A72H**	●	—	●	—	—	—	—	Relay, PLC
					24 V	12 V	100 V	**A93V**∗2	**A93**	**A93V**∗2	**A93**	●	●	●	●	—	—		
			No				100 V or less	**A90V**	**A90**	**A90V**	**A90**	●	—	●	—	—	—	IC circuit	
		Connector	Yes				—	—	**C73C**	**A73C**	—	●	—	●	●	●	—	—	
			No				24 V or less	—	**C80C**	**A80C**	—	●	—	●	●	●	—	IC circuit	
	Diagnostic indication (2-color indicator)	Grommet	Yes		—	—	—	—	**A79W**	—	●	—	●	—	—	—	—	

∗1: Water resistant type auto switches can be mounted on the above models, but in such case SMC cannot guarantee water resistance. Please contact SMC regarding water resistant types with the above model numbers.
∗2: 1 m type lead wire is only applicable to D-A93.

∗: Lead wire length symbols: 0.5 m····· Nil (Example) M9NW
1 m····· M (Example) M9NWM
3 m····· L (Example) M9NWL
5 m····· Z (Example) M9NWZ

∗: Since there are other applicable auto switches than listed, refer to page 108 for details.
∗: For details about auto switches with pre-wired connector, refer to the **WEB catalog** or the Best Pneumatics No. 2.

∗: Solid state auto switches marked with "○" are produced upon receipt of order.
∗: The D-A9□□/M9□□□/A7□□/A80□/F7□□/J7□□ auto switches are shipped together, (but not assembled). (For band mounting, only auto switch mounting brackets are assembled before being shipped.)

The CJ2R direct mount cylinder can be installed directly through the use of a square rod cover.

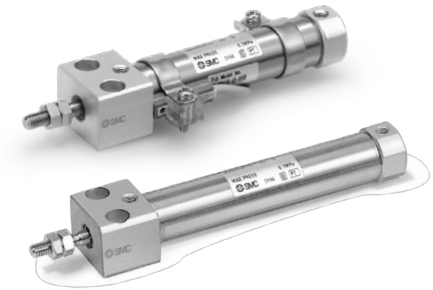

Symbol

Double acting, Single rod, Rubber bumper

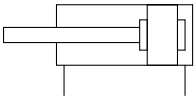

Made to Order

Made to Order
(For details, refer to pages 111 to 120.)

Symbol	Specifications
-XA□	Change of rod end shape
-XC9	Adjustable stroke cylinder/Adjustable retraction type
-XC22	Fluororubber seal
-XC51	With hose nipple
-XC85	Grease for food processing equipment
-X446	PTFE grease

⚠ Precautions

Refer to page 121 before handling.

Ordering Example of Cylinder Assembly

Cylinder model: CDJ2RA16-60Z-W-M9BW-B

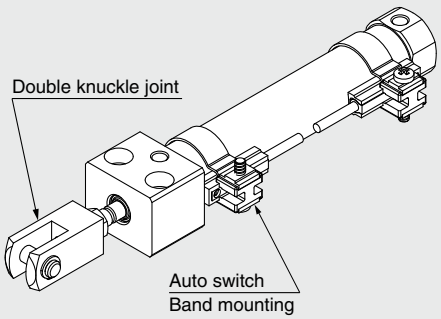

Mounting A: Bottom mounting
Rod end bracket W: Double knuckle joint
Auto switch D-M9BW: 2 pcs.
Auto switch mounting B: Band mounting

∗: Double knuckle joint and auto switch are shipped together with the product, but not assembled.

Specifications

Bore size [mm]	10	16
Action	Double acting, Single rod	
Fluid	Air	
Proof pressure	1 MPa	
Maximum operating pressure	0.7 MPa	
Minimum operating pressure	0.06 MPa	
Ambient and fluid temperature	Without auto switch: –10°C to 70°C With auto switch: –10°C to 60°C (No freezing)	
Cushion	Rubber bumper	
Lubrication	Not required (Non-lube)	
Stroke length tolerance	$^{+1.0}_{0}$	
Piston speed	50 to 750 mm/s	
Allowable kinetic energy	0.035 J	0.090 J

Standard Strokes

[mm]

Bore size	Standard stroke	Maximum manufacturable stroke
10	15, 30, 45, 60, 75, 100, 125, 150	400
16	15, 30, 45, 60, 75, 100, 125, 150, 175, 200	400

∗: Manufacture of intermediate strokes in 1 mm increments is possible. (Spacers are not used.)
∗: Applicable strokes should be confirmed according to the usage. For details, refer to "Air Cylinders Model Selection" on front matter pages of the Best Pneumatics No. 2 or the **WEB catalog**. In addition, the products that exceed the standard stroke might not be able to fulfill the specifications due to the deflection etc.

Accessories /Refer to page 22 for details about part numbers and dimensions.

Standard	Rod end nut
Option∗2	Single knuckle joint, Double knuckle joint∗1, Rod end cap (Flat/Round type)

∗1: A knuckle pin and retaining rings are shipped together with double knuckle joint.
∗2: Can be ordered within the cylinder model.

Weights

[g]

Bore size [mm]		10	16
Basic weight (When the stroke is zero)	Basic	36	61
	Axial piping	36	61
Additional weight per 15 mm of stroke		4	7
Accessories	Single knuckle joint	17	23
	Double knuckle joint (including knuckle pin)	25	21
	Rod end cap (Flat type)	1	2
	Rod end cap (Round type)	1	2

∗: Mounting nut and rod end nut are included in the basic weight.

Calculation:

Example) **CJ2RA10-45Z**

- Basic weight ····· 36 (ø10)
- Additional weight ···· 4/15 stroke
- Cylinder stroke····· 45 stroke

36 + 4/15 x 45 = **48 g**

Refer to pages 101 to 108 for cylinders with auto switches.

- Auto switch proper mounting position (detection at stroke end) and its mounting height
- Minimum stroke for auto switch mounting
- Operating range
- Auto switch mounting brackets/Part no.

Clean Series

10-CJ2RA $\frac{10}{16}$ **– Stroke Head cover port location Z**

• Clean Series

Air cylinder which is applicable for the system which discharges leakage from the rod section directly into the outside of clean room by relief port and making an actuator's rod section having a double seal construction.

For the detailed specifications, refer to the "Pneumatic Clean Series" (**WEB catalog**).

Specifications

Action	Double acting, Single rod
Bore size [mm]	10, 16
Maximum operating pressure	0.7 MPa
Minimum operating pressure	0.08 MPa
Cushion	Rubber bumper
Standard stroke [mm]	Same as standard type. (Refer to page 79.)
Auto switch	Mountable (Band mounting)
Mounting	Bottom mounting

Construction (Not able to disassemble)

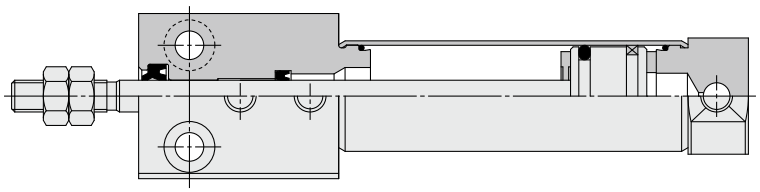

Construction (Not able to disassemble)

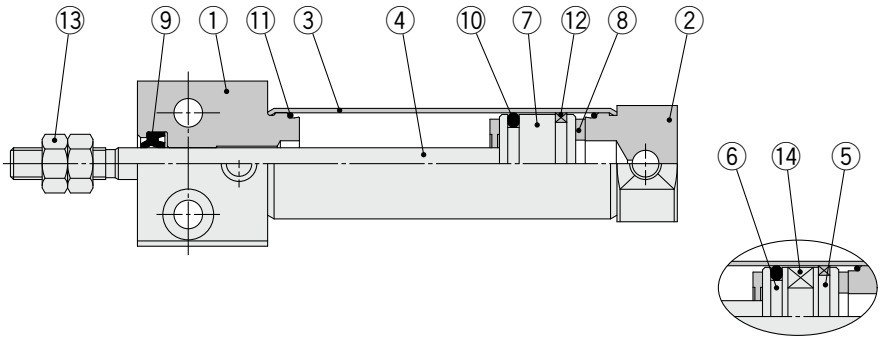

With auto switch

Component Parts

No.	Description	Material	Note
1	**Rod cover**	Aluminum alloy	
2	**Head cover**	Aluminum alloy	
3	**Cylinder tube**	Stainless steel	
4	**Piston rod**	Stainless steel	
5	**Piston A**	Aluminum alloy	
6	**Piston B**	Aluminum alloy	
7	**Piston**	Aluminum alloy	

No.	Description	Material	Note
8	**Bumper**	Urethane	
9	**Rod seal**	NBR	
10	**Piston seal**	NBR	
11	**Tube gasket**	NBR	
12	**Wear ring**	Resin	
13	**Rod end nut**	Rolled steel	
14	**Magnet**	—	

Bottom Mounting

CJ2RA $\begin{matrix}10\\16\end{matrix}$ – Stroke Head cover port location Z

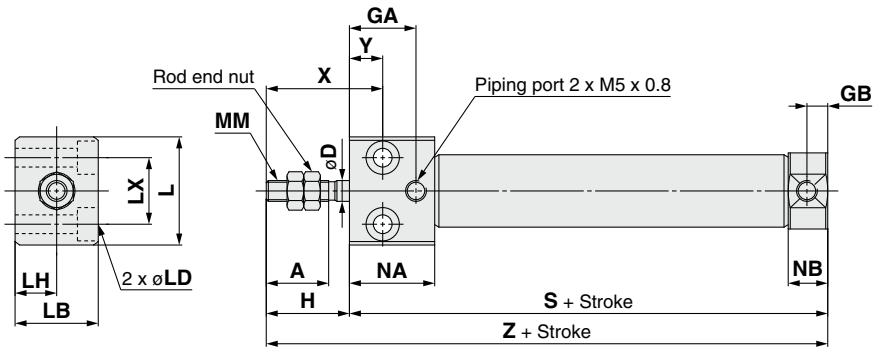

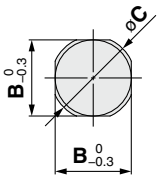

Head cover shape

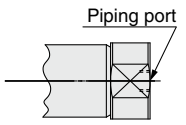

Head cover port location
Axial location (R)

∗: The overall cylinder length does not change.

[mm]

Bore size	A	B	C	D	GA	GB	H	L	LB	LD	LH	LX	MM	NA	NB	X	Y	S	Z
10	15	12	14	4	16	5	20	23	16	ø3.5 through, ø6.5 counterbore depth 4	8	12	M4 x 0.7	20.5	9.5	28	8	54	74
16	15	18.3	20	5	16	5	20	26	20	ø4.5 through, ø8 counterbore depth 5	10	16	M5 x 0.8	20.5	9.5	28	8	55	75

Air Cylinder: Direct Mount Type
Single Acting, Spring Return/Extend

Series CJ2R
ø10, ø16

RoHS

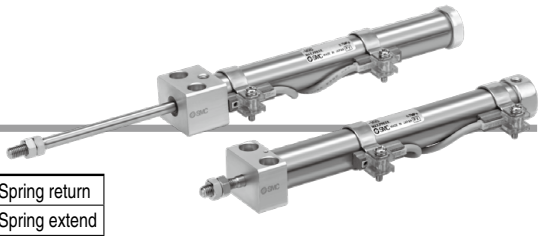

How to Order

Cylinder standard stroke [mm]
Refer to "Standard Strokes" on page 83.

Action

S	Single acting, Spring return
T	Single acting, Spring extend

CJ2RA 16 – 45 S Z –

With auto switch CDJ2RA 16 – 45 S Z – M9BW – B –

With auto switch
(Built-in magnet)

Mounting

A	Bottom mounting

Bore size

10	10 mm
16	16 mm

Head cover port location

Nil	Perpendicular to axis	
R	Axial	

∗: Not applicable to single acting, spring extend (T).

Auto switch

Nil	Without auto switch

∗: For applicable auto switches, refer to the table below.
★ Enter the auto switch mounting type (A or B) even when a built-in magnet cylinder without an auto switch is required.

Rod end bracket

Nil	None
V	Single knuckle joint
W	Double knuckle joint
T	Rod end cap (Flat type)
U	Rod end cap (Round type)

∗: Rod end bracket is shipped together with the product, but not assembled.
∗: A knuckle joint pin is not provided with the single knuckle joint.

Auto switch mounting type

A	Rail mounting
B	Band mounting

∗: For rail mounting, screws and nuts for 2 auto switches come with the rail.
∗: Refer to page 107 for auto switch mounting brackets.

Number of auto switches

Nil	2 pcs.
S	1 pc.
n	"n" pcs.

Made to Order
Refer to page 83 for details.

∗: **Refer to "Ordering Example of Cylinder Assembly" on page 83.**

Applicable Auto Switches/Refer to the **WEB catalog** or the Best Pneumatics No. 2 for further information on auto switches.

Type	Special function	Electrical entry	Indicator light	Wiring (Output)	Load voltage DC	Load voltage AC	Auto switch model: Band mounting Perpendicular	Band mounting In-line	Rail mounting Perpendicular	Rail mounting In-line	Lead wire length [m] 0.5 (Nil)	1 (M)	3 (L)	5 (Z)	None (N)	Pre-wired connector	Applicable load	
Solid state auto switch	—	Grommet	Yes	3-wire (NPN)	5 V,12 V	—	M9NV	M9N	M9NV	M9N	●	●	●	○	—	○	IC circuit	Relay, PLC
				3-wire (PNP)			M9PV	M9P	M9PV	M9P	●	●	●	○	—	○		
				2-wire	12 V		M9BV	M9B	M9BV	M9B	●	●	●	○	—	○	—	
		Connector					—	H7C	J79C	—	●	—	●	●	●	—		
	Diagnostic indication (2-color indicator)	Grommet		3-wire (NPN)	5 V,12 V		M9NWV	M9NW	M9NWV	M9NW	●	●	●	○	—	○	IC circuit	
				3-wire (PNP)			M9PWV	M9PW	M9PWV	M9PW	●	●	●	○	—	○		
				2-wire	12 V		M9BWV	M9BW	M9BWV	M9BW	●	●	●	○	—	○	—	
	Water resistant (2-color indicator)			3-wire (NPN)	5 V,12 V		M9NAV∗1	M9NA∗1	M9NAV∗1	M9NA∗1	○	○	●	○	—	○	IC circuit	
				3-wire (PNP)			M9PAV∗1	M9PA∗1	M9PAV∗1	M9PA∗1	○	○	●	○	—	○		
				2-wire	12 V		M9BAV∗1	M9BA∗1	M9BAV∗1	M9BA∗1	○	○	●	○	—	○	—	
	With diagnostic output (2-color indicator)			4-wire (NPN)	5 V,12 V		—	H7NF	—	F79F	●	—	●	○	—	○	IC circuit	
Reed auto switch	—	Grommet	Yes	3-wire (NPN equivalent)	—	5 V	—	A96V	A96	A96V	A96	●	—	●	—	—	—	IC circuit	—
				2-wire		—	200 V	—	—	A72	A72H	●	—	●	—	—	—	—	Relay, PLC
			No		24 V	12 V	100 V	A93V∗2	A93	A93V∗2	A93	●	●	●	●	—	—		
							100 V or less	A90V	A90	A90V	A90	●	—	●	—	—	—	IC circuit	
		Connector	Yes				—	—	C73C	A73C	—	●	—	●	●	●	—	—	
			No				24 V or less	—	C80C	A80C	—	●	—	●	●	●	—	IC circuit	
	Diagnostic indication (2-color indicator)	Grommet	Yes		—	—	—	—	A79W	—	●	—	●	—	—	—	—	

∗1: Water resistant type auto switches can be mounted on the above models, but in such case SMC cannot guarantee water resistance. Please contact SMC regarding water resistant types with the above model numbers.
∗2: 1 m type lead wire is only applicable to D-A93.

∗: Lead wire length symbols: 0.5 m····· Nil (Example) M9NW
1 m····· M (Example) M9NWM
3 m····· L (Example) M9NWL
5 m····· Z (Example) M9NWZ
None····· N (Example) H7CN

∗: Since there are other applicable auto switches than listed, refer to page 108 for details.
∗: For details about auto switches with pre-wired connector, refer to the **WEB catalog** or the Best Pneumatics No. 2.

∗: Solid state auto switches marked with "○" are produced upon receipt of order.
∗: The D-A9□□/M9□□□/A7□□/A80□/F7□□/J7□□ auto switches are shipped together, (but not assembled). (For band mounting, only auto switch mounting brackets are assembled before being shipped.)

The CJ2R direct mount cylinder can be installed directly through the use of a square rod cover.

Symbol

Single acting, Spring return, Rubber bumper

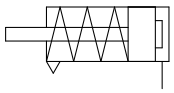

Single acting, Spring extend, Rubber bumper

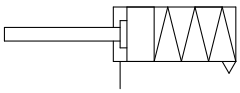

Made to Order

(For details, refer to pages 111 to 120.)

Symbol	Specifications
-XA□	Change of rod end shape
-XC51	With hose nipple
-XC85	Grease for food processing equipment
-X446	PTFE grease

⚠ Precautions

Refer to page 121 before handling.

Ordering Example of Cylinder Assembly

Cylinder model: CDJ2RA16-45SZ-W-M9BW-B

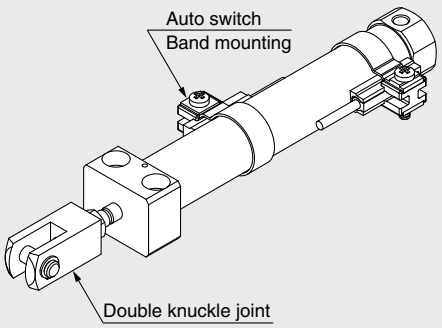

Mounting A: Bottom mounting
Rod end bracket W: Double knuckle joint
Auto switch D-M9BW: 2 pcs.
Auto switch mounting B: Band mounting

∗: Double knuckle joint and auto switch are shipped together with the product, but not assembled.

Specifications

Bore size [mm]	10	16
Action	Single acting, Spring return/Single acting, Spring extend	
Fluid	Air	
Proof pressure	1 MPa	
Maximum operating pressure	0.7 MPa	
Minimum operating pressure	0.15 MPa	
Ambient and fluid temperature	Without auto switch: –10°C to 70°C With auto switch: –10°C to 60°C (No freezing)	
Cushion	Rubber bumper	
Lubrication	Not required (Non-lube)	
Stroke length tolerance	$^{+1.0}_{0}$	
Piston speed	50 to 750 mm/s	
Allowable kinetic energy	0.035 J	0.090 J

Standard Strokes

[mm]

Bore size	Standard stroke
10	15, 30, 45, 60
16	15, 30, 45, 60, 75, 100, 125, 150

∗: Manufacture of intermediate strokes in 1 mm increments is possible. (Spacers are not used.)
∗: Please consult with SMC for strokes which exceed the standard stroke length.
∗: Applicable strokes should be confirmed according to the usage. For details, refer to "Air Cylinders Model Selection" on front matter pages of the Best Pneumatics No. 2 or the **WEB catalog**. In addition, the products that exceed the standard stroke might not be able to fulfill the specifications due to the deflection etc.

Accessories /Refer to page 22 for details about part numbers and dimensions.

Standard	Rod end nut
Option∗2	Single knuckle joint, Double knuckle joint∗1 Rod end cap (Flat type, Round type)

∗1: A knuckle pin and retaining rings are shipped together with double knuckle joint.
∗2: Can be ordered within the cylinder model.

Spring Reaction Force

Bore size [mm]	Spring reaction force [N]	
	Primary	Secondary
10	3.53	6.86
16	6.86	14.2

Spring with primary mounting load

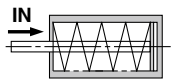

When the spring is set in the cylinder

Spring with secondary mounting load

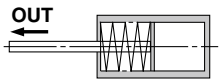

When the spring is contracted by applying air

Refer to pages 101 to 108 for cylinders with auto switches.

- Auto switch proper mounting position (detection at stroke end) and its mounting height
- Minimum stroke for auto switch mounting
- Operating range
- Auto switch mounting brackets/Part no.

Weights

Spring Return

[g]

Bore size [mm]		10		16	
Mounting		Basic	Axial	Basic	Axial
Basic weight	15 stroke	42	42	81	81
	30 stroke	49	49	97	97
	45 stroke	59	59	114	114
	60 stroke	68	68	132	132
	75 stroke			154	154
	100 stroke			187	187
	125 stroke			224	224
	150 stroke			246	246
Accessories	Single knuckle joint	17		23	
	Double knuckle joint (including knuckle pin)	25		21	
	Rod end cap (Flat type)	1		2	
	Rod end cap (Round type)	1		2	

Spring Extend

[g]

Bore size [mm]		10	16
Mounting		Basic	Basic
Basic weight	15 stroke	41	78
	30 stroke	47	92
	45 stroke	55	108
	60 stroke	64	123
	75 stroke		144
	100 stroke		173
	125 stroke		208
	150 stroke		228
Accessories	Single knuckle joint	17	23
	Double knuckle joint (including knuckle pin)	25	21
	Rod end cap (Flat type)	1	2
	Rod end cap (Round type)	1	2

∗: Rod end nut is included in the basic weight.

Construction (Not able to disassemble)

Single acting, Spring return

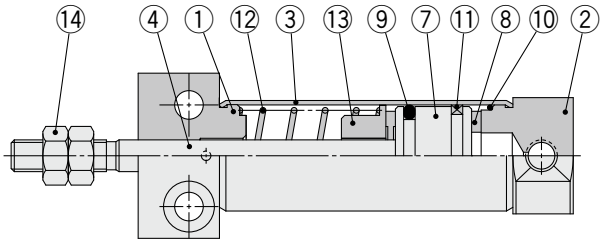

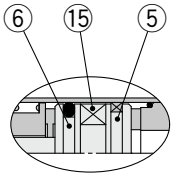

With auto switch

Single acting, Spring extend

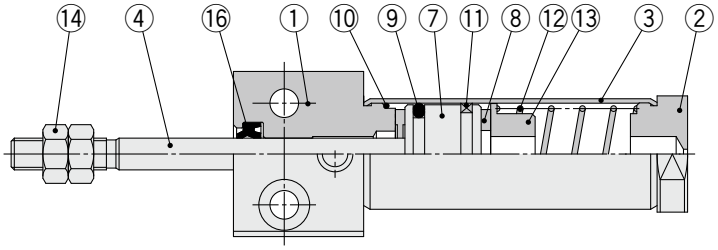

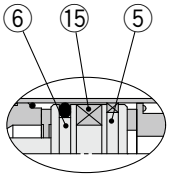

With auto switch

Component Parts

No.	Description	Material	Note
1	**Rod cover**	Aluminum alloy	
2	**Head cover**	Aluminum alloy	
3	**Cylinder tube**	Stainless steel	
4	**Piston rod**	Stainless steel	
5	**Piston A**	Aluminum alloy	
6	**Piston B**	Aluminum alloy	
7	**Piston**	Aluminum alloy	
8	**Bumper**	Urethane	

No.	Description	Material	Note
9	**Piston seal**	NBR	
10	**Tube gasket**	NBR	
11	**Wear ring**	Resin	
12	**Return spring**	Piano wire	
13	**Spring seat**	Aluminum alloy	
14	**Rod end nut**	Rolled steel	
15	**Magnet**	—	
16	**Rod seal**	NBR	

Single Acting: Bottom Mounting

Spring return: CJ2RA $\frac{10}{16}$ – Stroke S Head cover port location Z

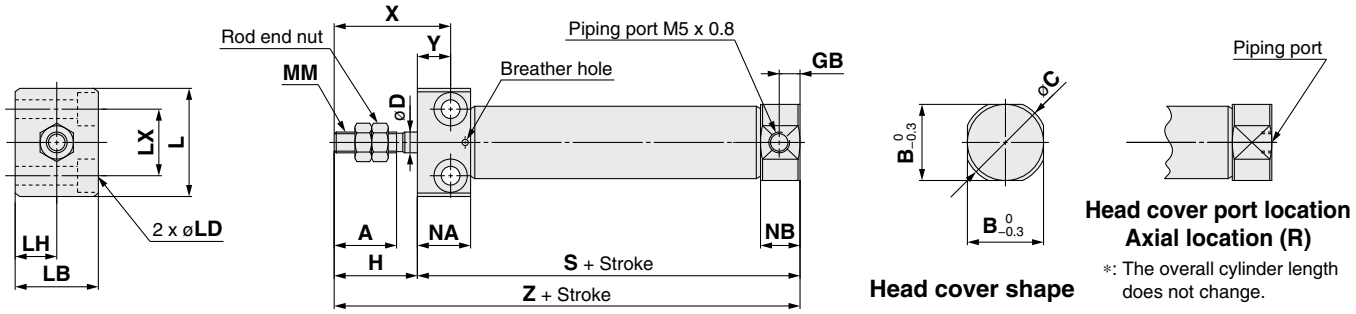

[mm]

Bore size	A	B	C	D	GB	H	L	LB	LD	LH	LX	MM	NA	NB	X	Y
10	15	12	14	4	5	20	23	16	ø3.5 through, ø6.5 counterbore depth 4	8	12	M4 x 0.7	12.8	9.5	28	8
16	15	18.3	20	5	5	20	26	20	ø4.5 through, ø8 counterbore depth 5	10	16	M5 x 0.8	12.8	9.5	28	8

Dimensions by Stroke: Spring Return

[mm]

Bore size	S								Z							
	5 to 15 st	16 to 30 st	31 to 45 st	46 to 60 st	61 to 75 st	76 to 100 st	101 to 125 st	126 to 150 st	5 to 15 st	16 to 30 st	31 to 45 st	46 to 60 st	61 to 75 st	76 to 100 st	101 to 125 st	126 to 150 st
10	53.5	61	73	85	—	—	—	—	73.5	81	93	105	—	—	—	—
16	53.5	62	74	86	92	116	134	146	73.5	82	94	106	112	136	154	166

Spring extend: CJ2RA $\frac{10}{16}$ – Stroke TZ

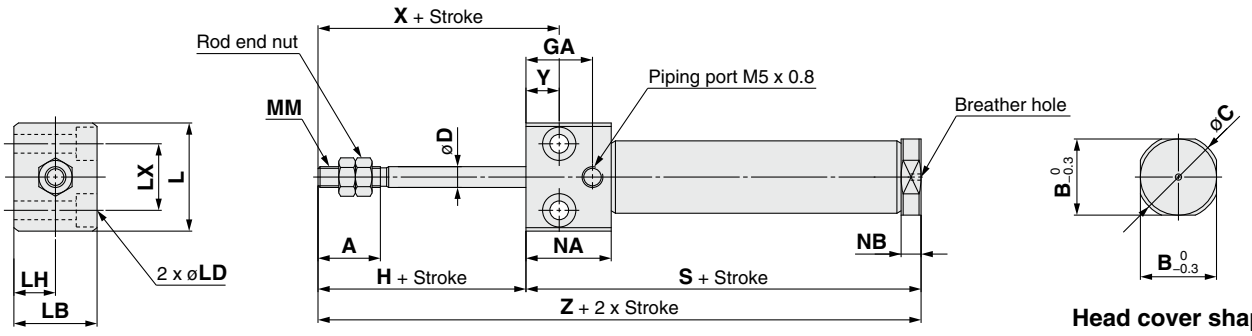

[mm]

Bore size	A	B	C	D	GA	H	L	LB	LD	LH	LX	MM	NA	NB	X	Y
10	15	12	14	4	16	20	23	16	ø3.5 through, ø6.5 counterbore depth 4	8	12	M4 x 0.7	20.5	4.8	28	8
16	15	18.3	20	5	16	20	26	20	ø4.5 through, ø8 counterbore depth 5	10	16	M5 x 0.8	20.5	4.8	28	8

Dimensions by Stroke: Spring Extend

[mm]

Bore size	S								Z							
	5 to 15 st	16 to 30 st	31 to 45 st	46 to 60 st	61 to 75 st	76 to 100 st	101 to 125 st	126 to 150 st	5 to 15 st	16 to 30 st	31 to 45 st	46 to 60 st	61 to 75 st	76 to 100 st	101 to 125 st	126 to 150 st
10	56.5	64	76	88	—	—	—	—	76.5	84	96	108	—	—	—	—
16	56.5	65	77	89	95	119	137	149	76.5	85	97	109	115	139	157	169

Air Cylinder: Direct Mount, Non-rotating Rod Type
Double Acting, Single Rod
Series CJ2RK
ø10, ø16

RoHS

How to Order

Cylinder standard stroke [mm]
Refer to "Standard Strokes" on page 87.

CJ2RKA 16 – 60 Z – – –

With auto switch **CDJ2RKA 16 – 60 Z – – M9BW – B –**

With auto switch
(Built-in magnet)

Mounting

A	Bottom mounting

Bore size

10	10 mm
16	16 mm

Head cover port location

Nil	Perpendicular to axis	
R	Axial	

Rod end bracket

Nil	None
V	Single knuckle joint
W	Double knuckle joint
T	Rod end cap (Flat type)
U	Rod end cap (Round type)

∗: Rod end bracket is shipped together with the product, but not assembled.
∗: A knuckle joint pin is not provided with the single knuckle joint.

Auto switch

Nil	Without auto switch

∗: For applicable auto switches, refer to the table below.
★ Enter the auto switch mounting type (A or B) even when a built-in magnet cylinder without an auto switch is required.

Auto switch mounting type

A	Rail mounting
B	Band mounting

∗: For rail mounting, screws and nuts for 2 auto switches come with the rail.
∗: Refer to page 107 for auto switch mounting brackets.

Number of auto switches

Nil	2 pcs.
S	1 pc.
n	"n" pcs.

Made to Order
Refer to page 87 for details.

∗: **Refer to "Ordering Example of Cylinder Assembly" on page 87.**

Applicable Auto Switches/Refer to the **WEB catalog** or the Best Pneumatics No. 2 for further information on auto switches.

Type	Special function	Electrical entry	Indicator light	Wiring (Output)	Load voltage DC	Load voltage AC	Auto switch model: Band mounting Perpendicular	Band mounting In-line	Rail mounting Perpendicular	Rail mounting In-line	Lead wire length [m] 0.5 (Nil)	1 (M)	3 (L)	5 (Z)	None (N)	Pre-wired connector	Applicable load	
Solid state auto switch	—	Grommet	Yes	3-wire (NPN)	5 V,12 V	—	M9NV	M9N	M9NV	M9N	●	●	●	○	—	○	IC circuit	Relay, PLC
				3-wire (PNP)			M9PV	M9P	M9PV	M9P	●	●	●	○	—	○		
				2-wire	12 V		M9BV	M9B	M9BV	M9B	●	●	●	○	—	○	—	
		Connector					—	H7C	J79C	—	●	—	●	●	●	—	—	
	Diagnostic indication (2-color indicator)	Grommet		3-wire (NPN)	5 V,12 V		M9NWV	M9NW	M9NWV	M9NW	●	●	●	○	—	○	IC circuit	
				3-wire (PNP)			M9PWV	M9PW	M9PWV	M9PW	●	●	●	○	—	○		
				2-wire	12 V		M9BWV	M9BW	M9BWV	M9BW	●	●	●	○	—	○	—	
	Water resistant (2-color indicator)			3-wire (NPN)	5 V,12 V		M9NAV∗1	M9NA∗1	M9NAV∗1	M9NA∗1	○	○	●	○	—	○	IC circuit	
				3-wire (PNP)			M9PAV∗1	M9PA∗1	M9PAV∗1	M9PA∗1	○	○	●	○	—	○		
				2-wire	12 V		M9BAV∗1	M9BA∗1	M9BAV∗1	M9BA∗1	○	○	●	○	—	○	—	
	With diagnostic output (2-color indicator)			4-wire (NPN)	5 V,12 V		—	H7NF	—	F79F	●	—	●	○	—	○	IC circuit	
Reed auto switch	—	Grommet	Yes	3-wire (NPN equivalent)	—	5 V	—	A96V	A96	A96V	A96	●	—	●	—	—	—	IC circuit	—
				2-wire		—	200 V	—	—	A72	A72H	●	—	●	—	—	—	—	Relay, PLC
			No		24 V	12 V	100 V	A93V∗2	A93	A93V∗2	A93	●	●	●	●	—	—		
							100 V or less	A90V	A90	A90V	A90	●	—	●	—	—	—	IC circuit	
		Connector	Yes				—	—	C73C	A73C	—	●	—	●	●	●	—	—	
			No				24 V or less	—	C80C	A80C	—	●	—	●	●	●	—	IC circuit	
	Diagnostic indication (2-color indicator)	Grommet	Yes		—	—	—	—	—	A79W	—	●	—	●	—	—	—	—	

∗1: Water resistant type auto switches can be mounted on the above models, but in such case SMC cannot guarantee water resistance. Please contact SMC regarding water resistant types with the above model numbers.
∗2: 1 m type lead wire is only applicable to D-A93.

∗: Lead wire length symbols: 0.5 m····· Nil (Example) M9NW
1 m····· M (Example) M9NWM
3 m····· L (Example) M9NWL
5 m····· Z (Example) M9NWZ
None····· N (Example) H7CN

∗: Since there are other applicable auto switches than listed, refer to page 108 for details.
∗: For details about auto switches with pre-wired connector, refer to the **WEB catalog** or the Best Pneumatics No. 2.

∗: Solid state auto switches marked with "○" are produced upon receipt of order.
∗: The D-A9□□/M9□□□/A7□□/A80□/F7□□/J7□□ auto switches are shipped together, (but not assembled). (For band mounting, only auto switch mounting brackets are assembled before being shipped.)

A cylinder which rod does not rotate because of the hexagonal rod shape.

Non-rotating accuracy
ø10: ±1.5°, ø16: ±1°

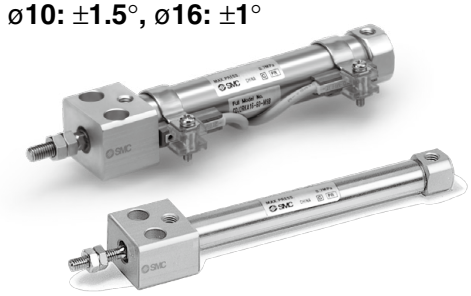

Symbol
Double acting, Single rod, Rubber bumper

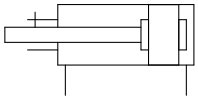

Made to Order
(For details, refer to pages 111 to 120.)

Symbol	Specifications
-XA□	Change of rod end shape
-XC9	Adjustable stroke cylinder/Adjustable retraction type
-XC51	With hose nipple
-XC85	Grease for food processing equipment
-X446	PTFE grease

⚠ Precautions

Refer to page 121 before handling.

Ordering Example of Cylinder Assembly

Cylinder model: CDJ2RKA16-60Z-W-M9BW-B

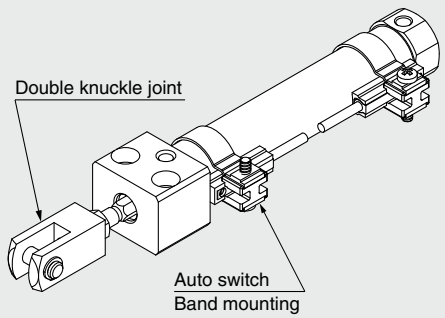

Mounting A: Bottom mounting
Rod end bracket W: Double knuckle joint
Auto switch D-M9BW: 2 pcs.
Auto switch mounting B: Band mounting

∗: Double knuckle joint and auto switch are shipped together with the product, but not assembled.

Specifications

Bore size [mm]	10	16
Action	Double acting, Single rod	
Fluid	Air	
Proof pressure	1 MPa	
Maximum operating pressure	0.7 MPa	
Minimum operating pressure	0.06 MPa	
Ambient and fluid temperature	Without auto switch: –10°C to 70°C With auto switch: –10°C to 60°C (No freezing)	
Cushion	Rubber bumper	
Lubrication	Not required (Non-lube)	
Stroke length tolerance	$^{+1.0}_{0}$	
Rod non-rotating accuracy	±1.5°	±1°
Piston speed	50 to 750 mm/s	
Allowable kinetic energy	0.035 J	0.090 J

Standard Strokes

[mm]

Bore size	Standard stroke
10	15, 30, 45, 60, 75, 100, 125, 150
16	15, 30, 45, 60, 75, 100, 125, 150, 175, 200

∗: Manufacture of intermediate strokes in 1 mm increments is possible. (Spacers are not used.)
∗: Please consult with SMC for strokes which exceed the standard stroke length.
∗: Applicable strokes should be confirmed according to the usage. For details, refer to "Air Cylinders Model Selection" on front matter pages of the Best Pneumatics No. 2 or the **WEB catalog**. In addition, the products that exceed the standard stroke might not be able to fulfill the specifications due to the deflection etc.

Accessories /Refer to page 22 for details about part numbers and dimensions.

Standard	Rod end nut
Option∗2	Single knuckle joint, Double knuckle joint∗1 Rod end cap (Flat/Round type)

∗1: A knuckle pin and retaining rings are shipped together with double knuckle joint.
∗2: Can be ordered within the cylinder model.

Weights

[g]

Bore size [mm]		10	16
Basic weight (When the stroke is zero)	Basic	36	62
	Axial piping	36	62
Additional weight per 15 mm of stroke		4	7
Accessories	Single knuckle joint	17	23
	Double knuckle joint (including knuckle pin)	25	21
	Rod end cap (Flat type)	1	2
	Rod end cap (Round type)	1	2

∗: Rod end nut is included in the basic weight.
Calculation:
Example) **CJ2RKA10-45Z**
- Basic weight ····· 36 (ø10)
- Additional weight ···· 4/15 stroke
- Cylinder stroke····· 45 stroke

36 + 4/15 x 45 = **48 g**

Refer to pages 101 to 108 for cylinders with auto switches.

- Auto switch proper mounting position (detection at stroke end) and its mounting height
- Minimum stroke for auto switch mounting
- Operating range
- Auto switch mounting brackets/Part no.

Construction (Not able to disassemble)

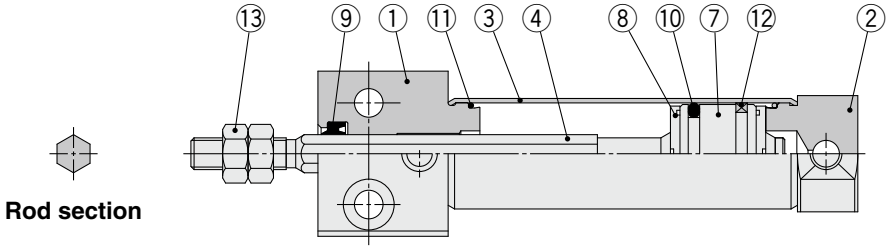

Component Parts

No.	Description	Material	Note
1	**Rod cover**	Aluminum alloy	
2	**Head cover**	Aluminum alloy	
3	**Cylinder tube**	Stainless steel	
4	**Piston rod**	Stainless steel	
5	**Piston A**	Aluminum alloy	
6	**Piston B**	Aluminum alloy	
7	**Piston**	Aluminum alloy	

No.	Description	Material	Note
8	**Bumper**	Urethane	
9	**Rod seal**	NBR	
10	**Piston seal**	NBR	
11	**Tube gasket**	NBR	
12	**Wear ring**	Resin	
13	**Rod end nut**	Rolled steel	
14	**Magnet**	—	

Bottom Mounting

CJ2RKA $\begin{matrix}10\\16\end{matrix}$ – Stroke Head cover port location Z

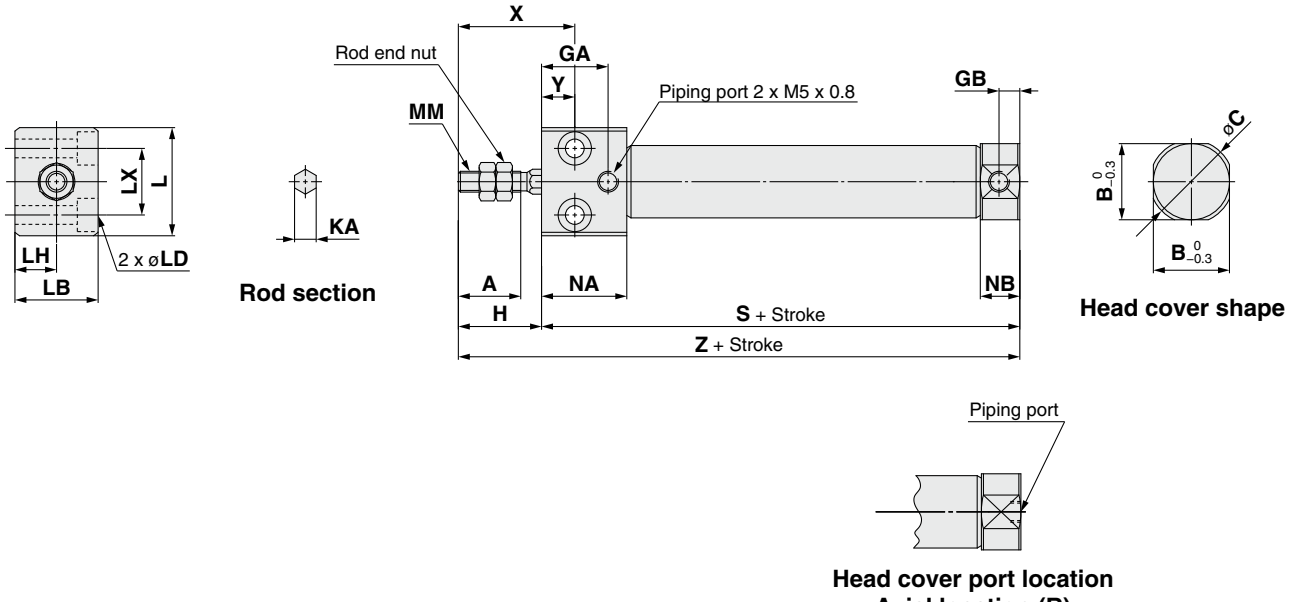

∗: The overall cylinder length does not change.

[mm]

Bore size	A	B	C	GA	GB	H	KA	L	LB	LD	LH	LX	MM	NA	NB	X	Y	S	Z
10	15	12	14	16	5	20	4.2	23	16	ø3.5 through, ø6.5 counterbore depth 4	8	12	M4 x 0.7	20.5	9.5	28	8	54	74
16	15	18.3	20	16	5	20	5.2	26	20	ø4.5 through, ø8 counterbore depth 5	10	16	M5 x 0.8	20.5	9.5	28	8	55	75

Air Cylinder: Direct Mount, Non-rotating Rod Type
Single Acting, Spring Return/Extend

Series CJ2RK

RoHS

ø10, ø16

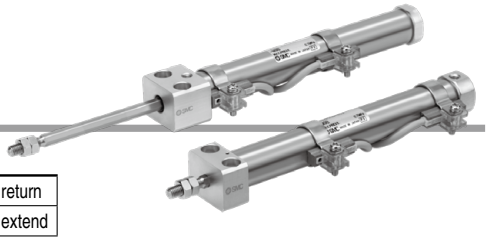

How to Order

Cylinder standard stroke [mm]
Refer to "Standard Strokes" on page 90.

Action

S	Single acting, Spring return
T	Single acting, Spring extend

CJ2RK A 16 – 45 S Z – – –

With auto switch **CDJ2RK A 16 – 45 S Z – – M9BW – B –**

With auto switch
(Built-in magnet)

Mounting

A	Bottom mounting

Bore size

10	10 mm
16	16 mm

Head cover port location

Nil	Perpendicular to axis	
R	Axial	

∗: Not applicable to single acting, spring extend (T).

Auto switch

Nil	Without auto switch

∗: For applicable auto switches, refer to the table below.
★ Enter the auto switch mounting type (A or B) even when a built-in magnet cylinder without an auto switch is required.

Rod end bracket

Nil	None
V	Single knuckle joint
W	Double knuckle joint
T	Rod end cap (Flat type)
U	Rod end cap (Round type)

∗: Rod end bracket is shipped together with the product, but not assembled.
∗: A knuckle joint pin is not provided with the single knuckle joint.

Auto switch mounting type

A	Rail mounting
B	Band mounting

∗: For rail mounting, screws and nuts for 2 auto switches come with the rail.
∗: Refer to page 107 for auto switch mounting brackets.

Number of auto switches

Nil	2 pcs.
S	1 pc.
n	"n" pcs.

Made to Order
Refer to page 90 for details.

∗: **Refer to "Ordering Example of Cylinder Assembly" on page 90.**

Applicable Auto Switches/Refer to the **WEB catalog** or the Best Pneumatics No. 2 for further information on auto switches.

Type	Special function	Electrical entry	Indicator light	Wiring (Output)	Load voltage DC	Load voltage AC	Auto switch model: Band mounting Perpendicular	Band mounting In-line	Rail mounting Perpendicular	Rail mounting In-line	Lead wire length [m] 0.5 (Nil)	1 (M)	3 (L)	5 (Z)	None (N)	Pre-wired connector	Applicable load	
Solid state auto switch	—	Grommet	Yes	3-wire (NPN)	5 V,12 V	—	M9NV	M9N	M9NV	M9N	●	●	●	○	—	○	IC circuit	Relay, PLC
				3-wire (PNP)			M9PV	M9P	M9PV	M9P	●	●	●	○	—	○		
				2-wire	12 V		M9BV	M9B	M9BV	M9B	●	●	●	○	—	○	—	
		Connector					—	H7C	J79C	—	●	—	●	●	●	—		
	Diagnostic indication (2-color indicator)	Grommet		3-wire (NPN)	5 V,12 V		M9NWV	M9NW	M9NWV	M9NW	●	●	●	○	—	○	IC circuit	
				3-wire (PNP)			M9PWV	M9PW	M9PWV	M9PW	●	●	●	○	—	○		
				2-wire	12 V		M9BWV	M9BW	M9BWV	M9BW	●	●	●	○	—	○	—	
	Water resistant (2-color indicator)			3-wire (NPN)	5 V,12 V		M9NAV∗1	M9NA∗1	M9NAV∗1	M9NA∗1	○	○	●	○	—	○	IC circuit	
				3-wire (PNP)			M9PAV∗1	M9PA∗1	M9PAV∗1	M9PA∗1	○	○	●	○	—	○		
				2-wire	12 V		M9BAV∗1	M9BA∗1	M9BAV∗1	M9BA∗1	○	○	●	○	—	○	—	
	With diagnostic output (2-color indicator)			4-wire (NPN)	5 V,12 V		—	H7NF	—	F79F	●	—	●	○	—	○	IC circuit	
Reed auto switch	—	Grommet	Yes	3-wire (NPN equivalent)	—	5 V	—	A96V	A96	A96V	A96	●	—	●	—	—	—	IC circuit	—
				2-wire		—	200 V	—	—	A72	A72H	●	—	●	—	—	—	—	Relay, PLC
					24 V	12 V	100 V	A93V∗2	A93	A93V∗2	A93	●	●	●	●	—	—		
			No				100 V or less	A90V	A90	A90V	A90	●	—	●	—	—	—	IC circuit	
		Connector	Yes				—	—	C73C	A73C	—	●	—	●	●	●	—	—	
			No				24 V or less	—	C80C	A80C	—	●	—	●	●	●	—	IC circuit	
	Diagnostic indication (2-color indicator)	Grommet	Yes		—	—	—	—	A79W	—	●	—	●	—	—	—	—	

∗1: Water resistant type auto switches can be mounted on the above models, but in such case SMC cannot guarantee water resistance. Please contact SMC regarding water resistant types with the above model numbers.
∗2: 1 m type lead wire is only applicable to D-A93.

∗: Lead wire length symbols: 0.5 m····· Nil (Example) M9NW
1 m····· M (Example) M9NWM
3 m····· L (Example) M9NWL
5 m····· Z (Example) M9NWZ
None····· N (Example) H7CN

∗: Since there are other applicable auto switches than listed, refer to page 108 for details.
∗: For details about auto switches with pre-wired connector, refer to the **WEB catalog** or the Best Pneumatics No. 2.

∗: Solid state auto switches marked with "○" are produced upon receipt of order.
∗: The D-A9□□/M9□□□/A7□□/A80□/F7□□/J7□□ auto switches are shipped together, (but not assembled). (For band mounting, only auto switch mounting brackets are assembled before being shipped.)

A cylinder which rod does not rotate because of the hexagonal rod shape.

Non-rotating accuracy
ø10: ±1.5°, ø16: ±1°
Can operate without lubrication.

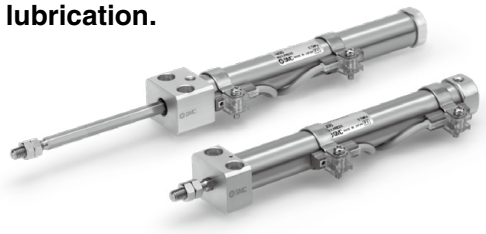

Symbol

Single acting, Spring return, Rubber bumper

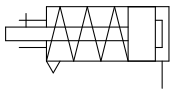

Single acting, Spring extend, Rubber bumper

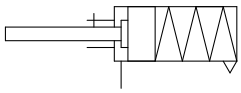

Made to Order
(For details, refer to pages 111 to 120.)

Symbol	Specifications
-XA□	Change of rod end shape
-XC51	With hose nipple
-XC85	Grease for food processing equipment
-X446	PTFE grease

⚠ Precautions

Refer to page 121 before handling.

Ordering Example of Cylinder Assembly

Cylinder model: CDJ2RKA16-45SZ-W-M9BW-B

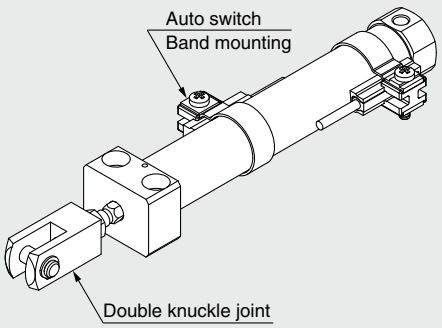

Mounting A: Bottom mounting
Rod end bracket W: Double knuckle joint
Auto switch D-M9BW: 2 pcs.
Auto switch mounting B: Band mounting

∗: Double knuckle joint and auto switch are shipped together with the product, but not assembled.

Specifications

Bore size [mm]	10	16
Action	Single acting, Spring return/Single acting, Spring extend	
Fluid	Air	
Proof pressure	1 MPa	
Maximum operating pressure	0.7 MPa	
Minimum operating pressure	0.15 MPa	
Ambient and fluid temperature	Without auto switch: –10°C to 70°C With auto switch: –10°C to 60°C (No freezing)	
Cushion	Rubber bumper	
Lubrication	Not required (Non-lube)	
Stroke length tolerance	$^{+1.0}_{0}$	
Rod non-rotating accuracy	±1.5°	±1°
Piston speed	50 to 750 mm/s	
Allowable kinetic energy	0.035 J	0.090 J

Standard Strokes

[mm]

Bore size	Standard stroke
10	15, 30, 45, 60
16	15, 30, 45, 60, 75, 100, 125, 150

∗: Manufacture of intermediate strokes in 1 mm increments is possible. (Spacers are not used.)
∗: Please consult with SMC for strokes which exceed the standard stroke length.
∗: Applicable strokes should be confirmed according to the usage. For details, refer to "Air Cylinders Model Selection" on front matter pages of the Best Pneumatics No. 2 or the **WEB catalog**. In addition, the products that exceed the standard stroke might not be able to fulfill the specifications due to the deflection etc.

Accessories /Refer to page 22 for details about part numbers and dimensions.

Standard	Rod end nut
Option∗2	Single knuckle joint, Double knuckle joint∗1 Rod end cap (Flat/Round type)

∗1: A knuckle pin and retaining rings are shipped together with double knuckle joint.
∗2: Can be ordered within the cylinder model.

Spring Reaction Force

Bore size [mm]	Spring reaction force [N]	
	Primary	Secondary
10	3.53	6.86
16	6.86	14.2

Spring with primary mounting load

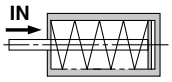

When the spring is set in the cylinder

Spring with secondary mounting load

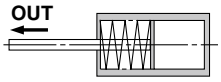

When the spring is contracted by applying air

Refer to pages 101 to 108 for cylinders with auto switches.

- Auto switch proper mounting position (detection at stroke end) and its mounting height
- Minimum stroke for auto switch mounting
- Operating range
- Auto switch mounting brackets/Part no.

Weights

Spring Return

[g]

Bore size [mm]		10		16	
Mounting		Basic	Axial	Basic	Axial
Basic weight	15 stroke	44	44	83	83
	30 stroke	52	52	99	99
	45 stroke	62	62	117	117
	60 stroke	72	72	135	135
	75 stroke			157	157
	100 stroke			191	191
	125 stroke			228	228
	150 stroke			251	251
Accessories	Single knuckle joint	17		23	
	Double knuckle joint (including knuckle pin)	25		21	
	Rod end cap (Flat type)	1		2	
	Rod end cap (Round type)	1		2	

Spring Extend

[g]

Bore size [mm]		10	16
Mounting		Basic	Basic
Basic weight	15 stroke	42	79
	30 stroke	48	93
	45 stroke	57	110
	60 stroke	66	126
	75 stroke		147
	100 stroke		177
	125 stroke		213
	150 stroke		234
Accessories	Single knuckle joint	17	23
	Double knuckle joint (including knuckle pin)	25	21
	Rod end cap (Flat type)	1	2
	Rod end cap (Round type)	1	2

∗: Rod end nut is included in the basic weight.

Construction (Not able to disassemble)

Single acting, Spring return

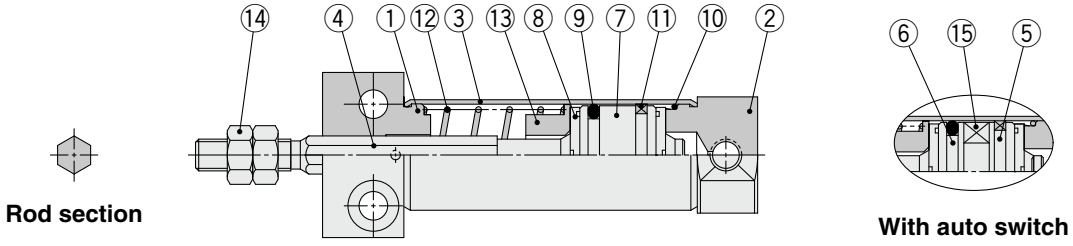

Single acting, Spring extend

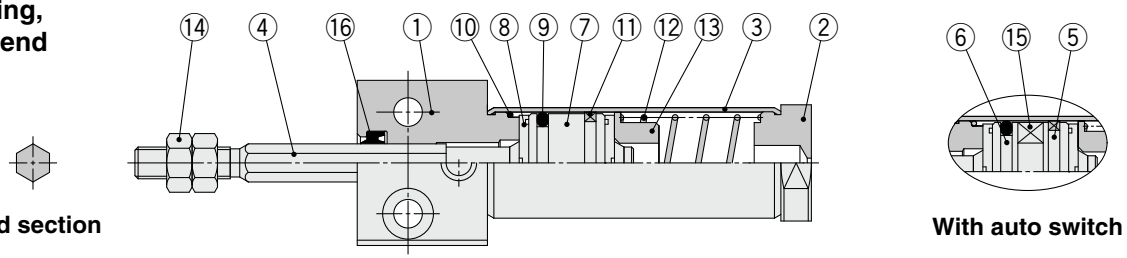

Component Parts

No.	Description	Material	Note
1	**Rod cover**	Aluminum alloy	
2	**Head cover**	Aluminum alloy	
3	**Cylinder tube**	Stainless steel	
4	**Piston rod**	Stainless steel	
5	**Piston A**	Aluminum alloy	
6	**Piston B**	Aluminum alloy	
7	**Piston**	Aluminum alloy	
8	**Bumper**	Urethane	

No.	Description	Material	Note
9	**Piston seal**	NBR	
10	**Tube gasket**	NBR	
11	**Wear ring**	Resin	
12	**Return spring**	Piano wire	
13	**Spring seat**	Aluminum alloy	
14	**Rod end nut**	Rolled steel	
15	**Magnet**	—	
16	**Rod seal**	NBR	

Single Acting: Bottom Mounting

Spring return: CJ2RK $\begin{matrix}10\\16\end{matrix}$ – Stroke S Head cover port location Z

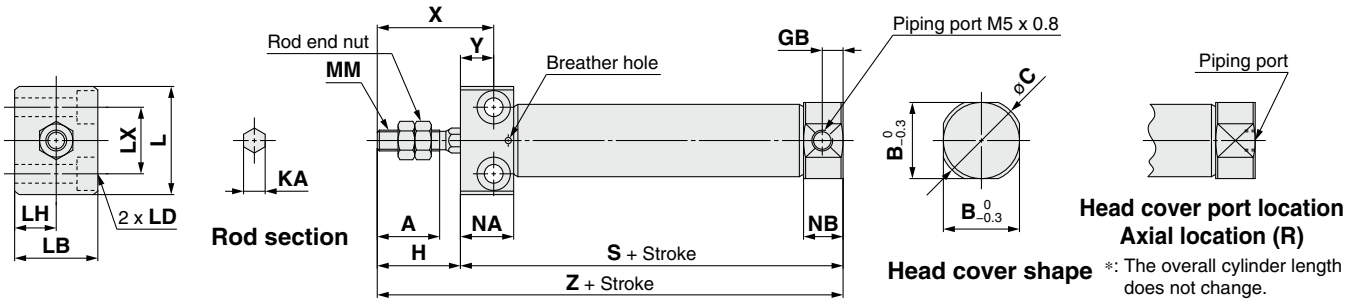

[mm]

Bore size	A	B	C	GB	H	KA	L	LB	LD	LH	LX	MM	NA	NB	X	Y
10	15	12	14	5	20	4.2	23	16	ø3.5 through, ø6.5 counterbore depth 4	8	12	M4 x 0.7	12.8	9.5	28	8
16	15	18.3	20	5	20	5.2	26	20	ø4.5 through, ø8 counterbore depth 5	10	16	M5 x 0.8	12.8	9.5	28	8

Dimensions by Stroke: Spring Return [mm]

Bore size	S								Z							
	5 to 15	16 to 30	31 to 45	46 to 60	61 to 75	76 to 100	101 to 125	126 to 150	5 to 15	16 to 30	31 to 45	46 to 60	61 to 75	76 to 100	101 to 125	126 to 150
10	53.5	61	73	85	—	—	—	—	73.5	81	93	105	—	—	—	—
16	53.5	62	74	86	92	116	134	146	73.5	82	94	106	112	136	154	166

Spring extend: CJ2RK $\begin{matrix}10\\16\end{matrix}$ – Stroke TZ

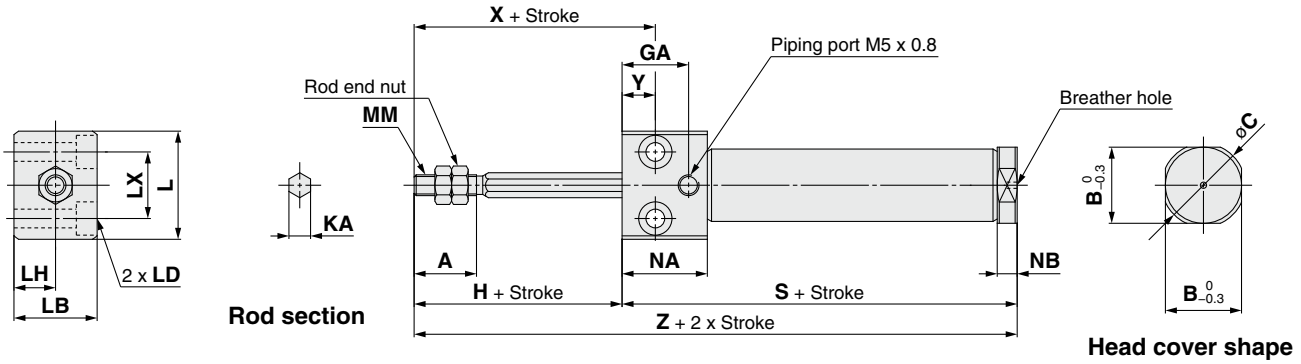

[mm]

Bore size	A	B	C	GA	H	KA	L	LB	LD	LH	LX	MM	NA	NB	X	Y
10	15	12	14	16	20	4.2	23	16	ø3.5 through, ø6.5 counterbore depth 4	8	12	M4 x 0.7	20.5	4.8	28	8
16	15	18.3	20	16	20	5.2	26	20	ø4.5 through, ø8 counterbore depth 5	10	16	M5 x 0.8	20.5	4.8	28	8

Dimensions by Stroke: Spring Extend (Dimensions not mentioned in the below table are the same as the above table.) [mm]

Bore size	S								Z							
	5 to 15	16 to 30	31 to 45	46 to 60	61 to 75	76 to 100	101 to 125	126 to 150	5 to 15	16 to 30	31 to 45	46 to 60	61 to 75	76 to 100	101 to 125	126 to 150
10	56.5	64	76	88	—	—	—	—	76.5	84	96	108	—	—	—	—
16	56.5	65	77	89	95	119	137	149	76.5	85	97	109	115	139	157	169

Air Cylinder: With End Lock

Series CBJ2

ø16

RoHS

How to Order

Built-in Magnet Cylinder Model

Suffix the symbol "-A" (Rail mounting) or "-B" (Band mounting) to the end of part number for cylinder with auto switch.

Example	Rail mounting	CDBJ2B16-45-HN-A
	Band mounting	CDBJ2B16-60-HN-B

∗: For rail mounting, screws and nuts for 2 auto switches come with the rail.
∗: Refer to page 107 for auto switch mounting brackets.

Lock position

H	Head end lock
R	Rod end lock

Cylinder standard stroke [mm]
Refer to "Standard Strokes" on page 94.

Without auto switch: CBJ2 **L** 16 – **60** – **H** **N**

With auto switch: CDBJ2 **L** 16 – **60** – **H** **N** – **M9BW** **□** – **C**

With auto switch
(Built-in magnet)

Manual release

N	Non-locking type

Mounting

B	Basic
L	Axial foot
F	Rod flange
D	Double clevis∗1

∗: Foot/Flange brackets are shipped together with the product, but not assembled.
∗1: Rod end lock only.

Auto switch

Nil	Without auto switch

∗: For applicable auto switches, refer to the table below.
★ Enter the auto switch mounting type (A or B) even when a built-in magnet cylinder without an auto switch is required.

Auto switch mounting bracket∗2
∗2: This symbol is indicated when the D-A9□ or M9□ type auto switch is specified.
This mounting bracket does not apply to other auto switches (D-C7□ and H7□, etc.) (Nil)

Number of auto switches

Nil	2 pcs.
S	1 pc.
n	"n" pcs.

Applicable Auto Switches/Refer to the **WEB catalog** or the Best Pneumatics No. 2 for further information on auto switches.

Type	Special function	Electrical entry	Indicator light	Wiring (Output)	Load voltage DC	Load voltage AC	Auto switch model: Band mounting Perpendicular	Band mounting In-line	Rail mounting Perpendicular	Rail mounting In-line	Lead wire length [m] 0.5 (Nil)	1 (M)	3 (L)	5 (Z)	None (N)	Pre-wired connector	Applicable load	
Solid state auto switch	——	Grommet	Yes	3-wire (NPN)	5 V,12 V	—	**M9NV**	**M9N**	**M9NV**	**M9N**	●	●	●	○	—	○	IC circuit	Relay, PLC
				3-wire (PNP)			**M9PV**	**M9P**	**M9PV**	**M9P**	●	●	●	○	—	○		
				2-wire	12 V		**M9BV**	**M9B**	**M9BV**	**M9B**	●	●	●	○	—	○	—	
		Connector					—	**H7C**	**J79C**	—	●	—	●	●	●	—		
	Diagnostic indication (2-color indicator)	Grommet		3-wire (NPN)	5 V,12 V		**M9NWV**	**M9NW**	**M9NWV**	**M9NW**	●	●	●	○	—	○	IC circuit	
				3-wire (PNP)			**M9PWV**	**M9PW**	**M9PWV**	**M9PW**	●	●	●	○	—	○		
				2-wire	12 V		**M9BWV**	**M9BW**	**M9BWV**	**M9BW**	●	●	●	○	—	○	—	
	Water resistant (2-color indicator)			3-wire (NPN)	5 V,12 V		**M9NAV**∗1	**M9NA**∗1	**M9NAV**∗1	**M9NA**∗1	○	○	●	○	—	○	IC circuit	
				3-wire (PNP)			**M9PAV**∗1	**M9PA**∗1	**M9PAV**∗1	**M9PA**∗1	○	○	●	○	—	○		
				2-wire	12 V		**M9BAV**∗1	**M9BA**∗1	**M9BAV**∗1	**M9BA**∗1	○	○	●	○	—	○	—	
	With diagnostic output (2-color indicator)			4-wire (NPN)	5 V,12 V		—	**H7NF**	—	**F79F**	●	—	●	○	—	○	IC circuit	
Reed auto switch	——	Grommet	Yes	3-wire (NPN equivalent)	—	5 V	—	**A96V**	**A96**	**A96V**	**A96**	●	—	●	—	—	—	IC circuit	—
				2-wire		200 V	—	—	**A72**	**A72H**	●	—	●	—	—	—	—	Relay, PLC
					24 V	100 V	**A93V**∗2	**A93**	**A93V**∗2	**A93**	●	●	●	●	—	—		
			No			12 V	100 V or less	**A90V**	**A90**	**A90V**	**A90**	●	—	●	—	—	—	IC circuit	
		Connector	Yes				—	—	**C73C**	**A73C**	—	●	—	●	●	●	—	—	
			No				24 V or less	—	**C80C**	**A80C**	—	●	—	●	●	●	—	IC circuit	
	Diagnostic indication (2-color indicator)	Grommet	Yes		—	—	—	—	**A79W**	—	●	—	●	—	—	—	—	

∗1: Water resistant type auto switches can be mounted on the above models, but in such case SMC cannot guarantee water resistance. Please contact SMC regarding water resistant types with the above model numbers.
∗2: 1 m type lead wire is only applicable to D-A93.

∗: Lead wire length symbols: 0.5 m····· Nil (Example) M9NW
1 m····· M (Example) M9NWM
3 m····· L (Example) M9NWL
5 m····· Z (Example) M9NWZ
None····· N (Example) H7CN

∗: Since there are other applicable auto switches than listed, refer to page 108 for details.
∗: For details about auto switches with pre-wired connector, refer to the **WEB catalog** or the Best Pneumatics No. 2.

∗: Solid state auto switches marked with "○" are produced upon receipt of order.
∗: The D-A9□□/M9□□□/A7□□/A80□/F7□□/J7□□ auto switches are shipped together, (but not assembled). (However, when the D-A9□□/M9□□□ types are selected, only auto switch mounting brackets are assembled before being shipped.)
∗: When the D-A9□□/M9□□□ types are mounted on a rail, order auto switch mounting brackets separately. Refer to page 107 for details.

The CJ2 air cylinder is equipped with end lock function.

Symbol

Rubber bumper

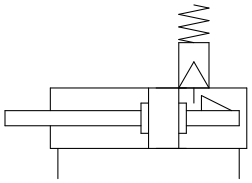

Specifications

Bore size [mm]	**16**
Action	Double acting, Single rod
Fluid	Air
Proof pressure	1 MPa
Maximum operating pressure	0.7 MPa
Minimum operating pressure	0.15 MPa*
Ambient and fluid temperature	Without auto switch: –10°C to 70°C With auto switch: –10°C to 60°C (No freezing)
Cushion	Rubber bumper
Lubrication	Not required (Non-lube)
Stroke length tolerance	$^{+1.0}_{0}$
Piston speed	50 to 750 mm/s
Allowable kinetic energy	0.090 J

*: 0.06 MPa for parts other than the lock unit.

Lock Specifications

Lock position	Head end, Rod end
Holding force (Max.)	98 N
Lock release pressure	0.15 MPa or less
Backlash	1 mm or less
Manual release	Non-locking type

Standard Strokes

[mm]

Bore size	Standard stroke
16	15, 30, 45, 60, 75, 100, 125, 150, 175, 200

*: Manufacture of intermediate strokes in 1 mm increments is possible. (Spacers are not used.)

*: Applicable strokes should be confirmed according to the usage. For details, refer to "Air Cylinders Model Selection" on front matter pages of the Best Pneumatics No. 2 or the **WEB catalog**. In addition, the products that exceed the standard stroke might not be able to fulfill the specifications due to the deflection etc.

Mounting Brackets/Part No.

Mounting bracket	Bore size [mm]
	16
Foot	CJ-L016B
Flange	CJ-F016B
T-bracket*1	CJ-T016B

*1: T-bracket is used with double clevis (D).

Refer to pages 101 to 108 for cylinders with auto switches.

- Auto switch proper mounting position (detection at stroke end) and its mounting height
- Minimum stroke for auto switch mounting
- Operating range
- Auto switch mounting brackets/Part no.

Moisture Control Tube Series IDK

When operating an actuator with a small diameter and a short stroke at a high frequency, the dew condensation (water droplet) may occur inside the piping depending on the conditions.
Simply connecting the moisture control tube to the actuator will prevent dew condensation from occurring. For details, refer to **the IDK series in the WEB catalog**.

Series CBJ2
Specific Product Precautions

Be sure to read this before handling. Please consult with SMC for products outside these specifications.

Use Recommended Air Pressure Circuit.

⚠Caution

• It is necessary for proper locking and unlocking.

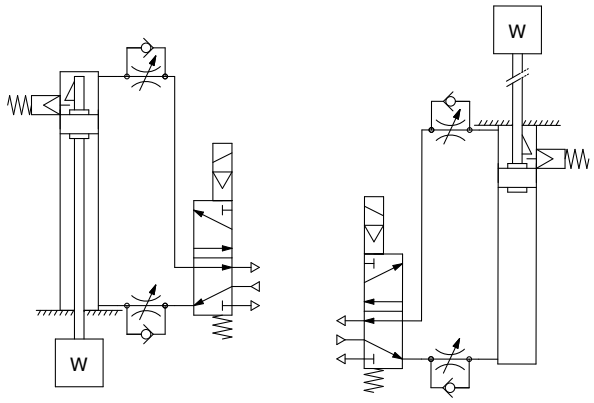

With head end lock

With rod end lock

Selection

⚠Caution

1. Do not use a 3-position solenoid valve.
Avoid using this cylinder in combination with a 3-position solenoid valve (particularly the closed center metal seal type). If air pressure becomes sealed inside the port on the side that contains the lock mechanism, the lock will not engage. Even if the lock is engaged at first, the air that leaks from the solenoid valve could enter the cylinder and cause the lock to disengage as time elapses.

2. Back pressure is necessary for unlocking.
Before starting, make sure that air is supplied to the side that is not equipped with a lock mechanism as shown in the diagram above. Otherwise, the lock may not disengage. (Refer to "Lock Disengagement.")

3. Disengage the lock before installing or adjusting the cylinder.
The lock could become damaged if the cylinder is installed with its lock engaged.

4. Operate the cylinder at a load ratio of 50% or less.
The lock might not disengage or might become damaged if a load ratio of 50% is exceeded.

5. Do not synchronize multiple cylinders.
Do not operate two or more end lock cylinders synchronized to move a single workpiece because one of the cylinder locks may not be able to disengage when required.

6. Operate the speed controller under meter-out control.
If operated under meter-in control, the lock might not disengage.

7. On the side that has a lock, make sure to operate at the stroke end of the cylinder.
The lock might not engage or disengage if the piston of the cylinder has not reached the stroke end.

8. The position adjustment of the auto switch should be performed at two positions; a position determined by the stroke and a position after the backlash movement (by 1 mm).
When a 2-color indication switch is adjusted to show green at the stroke end, the indication may turn red when the cylinder returns by the backlash. This, however, is not an error.

Operating Pressure

⚠Caution

Supply air pressure of 0.15 MPa or higher to the port on the side that has the lock mechanism, as it is necessary for disengaging the lock.

Exhaust Air Speed

⚠Caution

The lock will engage automatically if the air pressure at the port on the side that has the lock mechanism becomes 0.05 MPa or less. Be aware that if the piping on the side that has the lock mechanism is narrow and long, or if the speed controller is located far from the cylinder port, the exhaust air speed could become slower, involving a longer time for the lock to engage. A similar result will ensure if the silencer that is installed on the exhaust port of the solenoid valve becomes clogged.

Lock Disengagement

⚠Warning

To disengage the lock, make sure to supply air pressure to the port on the side without a lock mechanism, thus preventing the load from being applied to the lock mechanism. (Refer to the recommended air pressure circuit.) If the lock is disengaged when the port on the side that does not contain a lock mechanism is in the exhausted state and the load is being applied to the lock mechanism, undue force will be applied to the lock mechanism, and it may damage the lock mechanism. Also, it could be extremely dangerous, because the piston rod could move suddenly.

Manual Disengagement

⚠Caution

Non-locking type manual release

Insert the bolt, which is provided as an accessory part, through the rubber cap (it is not necessary to remove the rubber cap). Screw the bolt into the lock piston and pull the bolt to disengage the lock. Releasing the bolt will re-engage the lock. The bolt size, pulling force, and the stroke are listed below.

Bore size [mm]	Thread size	Pulling force [N]	Stroke [mm]
16	M2.5 x 0.45 x 25 L or more	4.9	2

Bolt should be detached under normal operation, otherwise it may cause malfunction of the locking feature.

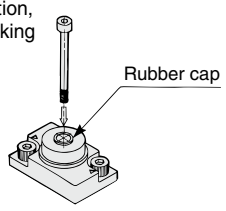

Construction (Not able to disassemble)

Head end lock

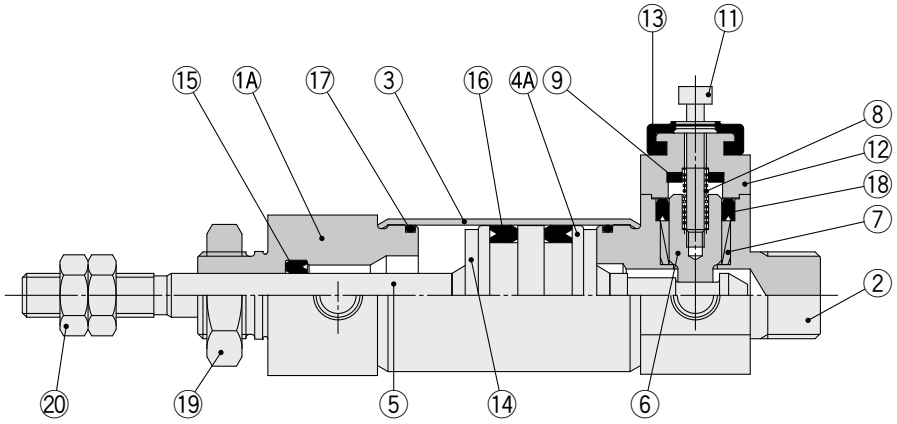

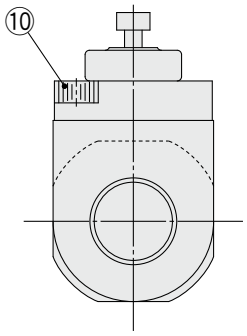

Rod end lock

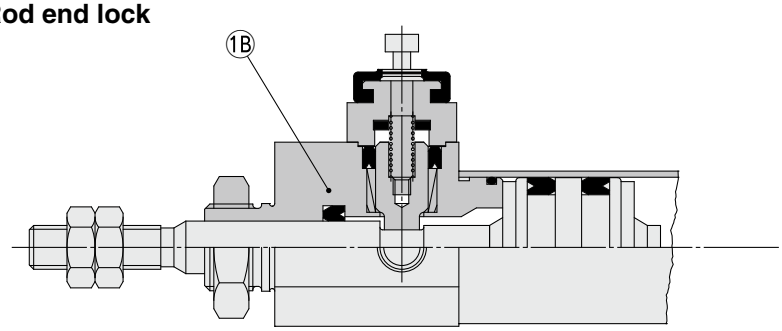

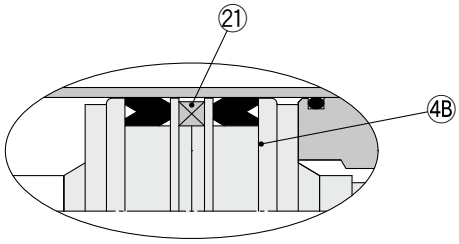

With auto switch

Component Parts

No.	Description	Material	Note
1A	**Rod cover**	Aluminum alloy	
1B	**Rod cover**	Stainless steel	
2	**Head cover**	Aluminum alloy	
3	**Cylinder tube**	Stainless steel	
4A	**Piston**	Aluminum alloy	
4B	**Piston B**	Aluminum alloy	
5	**Piston rod**	Carbon steel	
6	**Locking piston**	Carbon steel	
7	**Locking bushing**	Copper alloy	
8	**Lock spring**	Spring steel	
9	**Bumper**	Urethane	
10	Hexagon socket head cap screw	Alloy steel	

No.	Description	Material	Note
11	Hexagon socket head cap screw	Alloy steel	
12	**Cap**	Aluminum alloy	
13	**Rubber cap**	Synthetic rubber	
14	**Bumper**	Urethane	
15	**Rod seal**	NBR	
16	**Piston seal**	NBR	
17	**Tube gasket**	NBR	
18	**Locking piston seal**	NBR	
19	**Mounting nut**	Brass	
20	**Rod end nut**	Rolled steel	
21	**Magnet**	—	

Dimensions

Basic

With rod end lock: C□BJ2B16-□□-RN

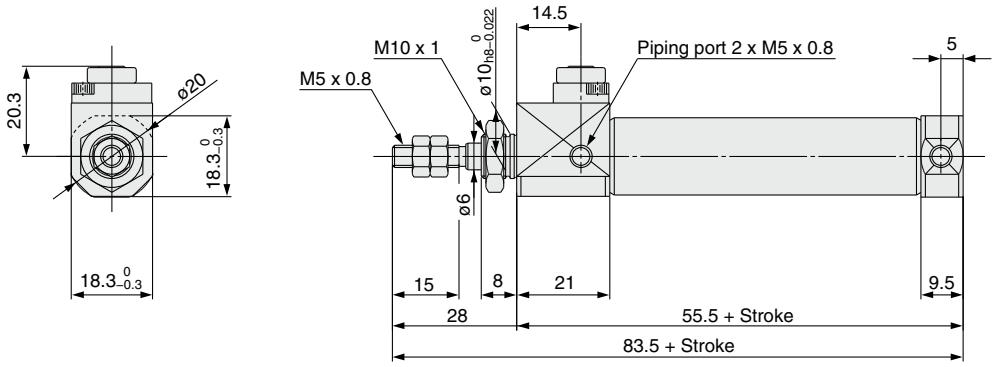

With head end lock: C□BJ2B16-□□-HN

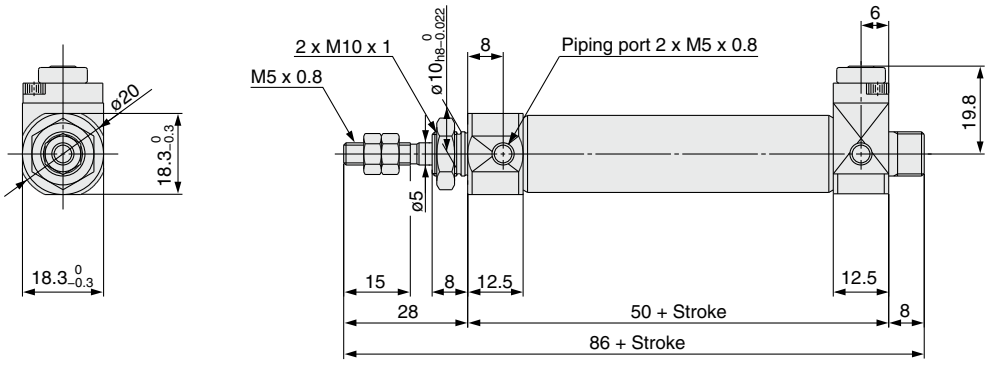

Dimensions

Flange

With rod end lock: C□BJ2F16-□□-RN

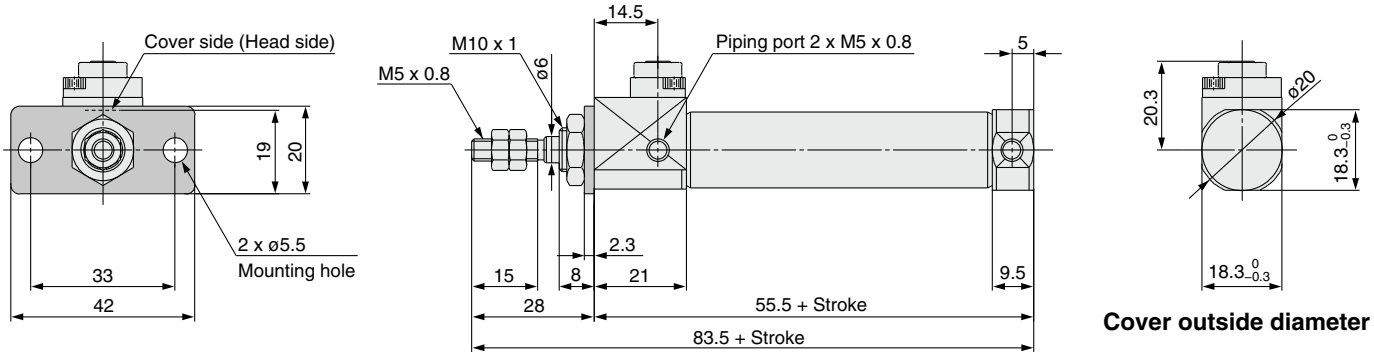

Cover outside diameter

With head end lock: C□BJ2F16-□□-HN

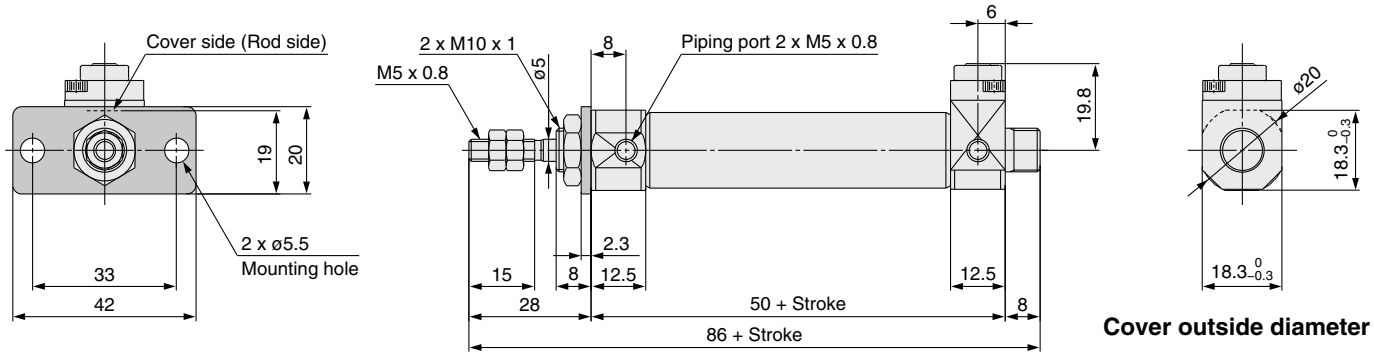

Cover outside diameter

Dimensions

Axial foot

With rod end lock: C□BJ2L16-□□-RN

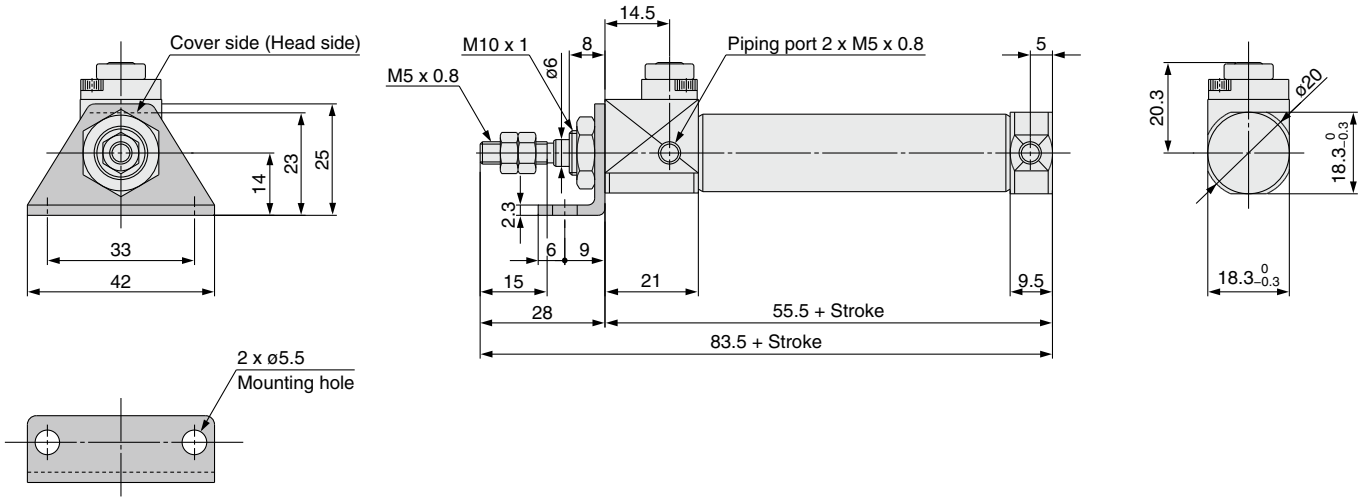

With head end lock: C□BJ2L16-□□-HN

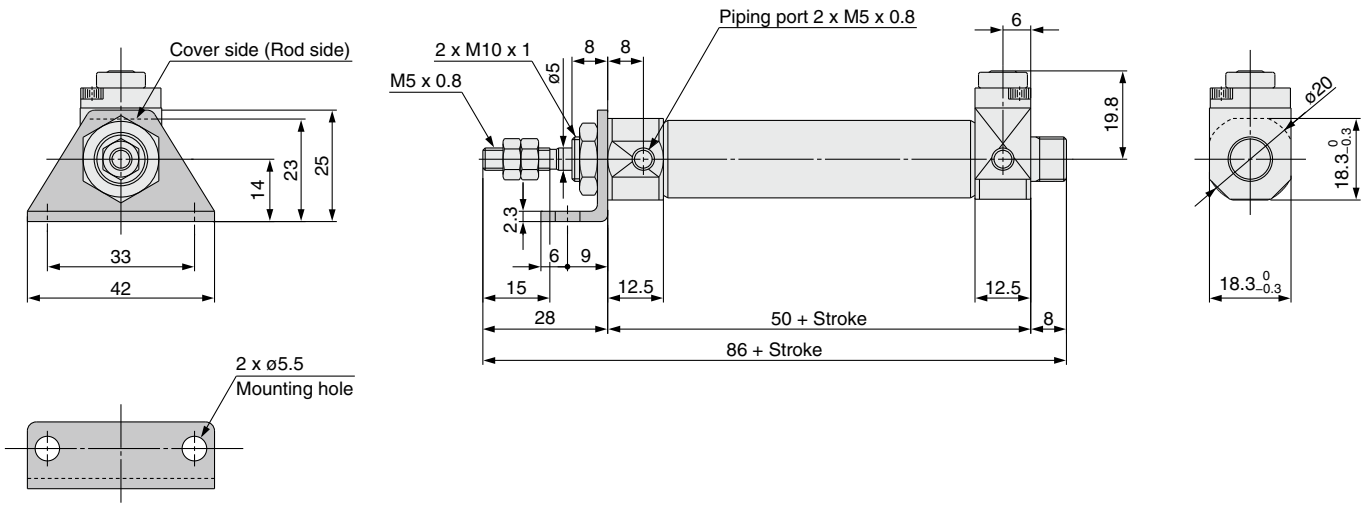

Dimensions

Double clevis

With rod end lock: C□BJ2D16-□□-RN

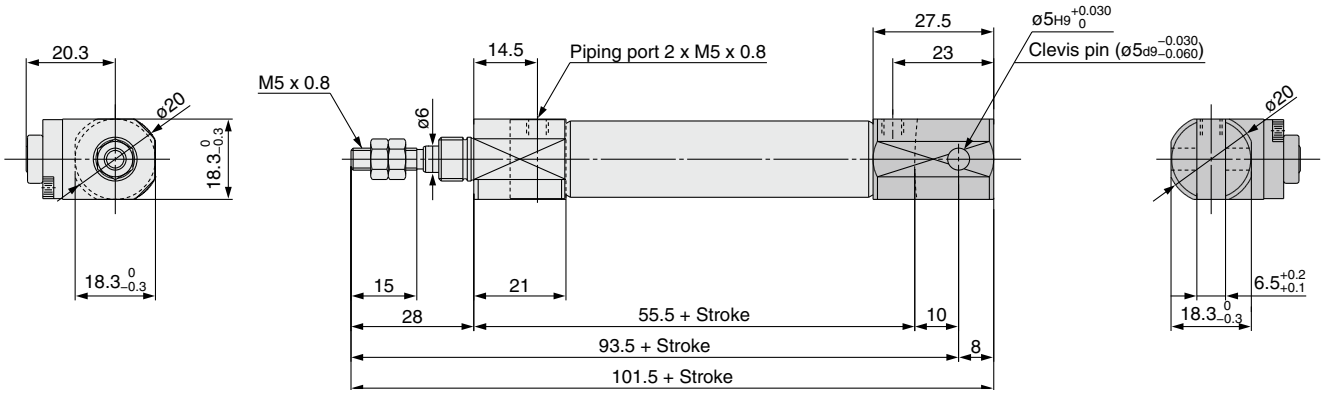

Auto Switch Mounting

Auto Switch Proper Mounting Position (Detection at stroke end) and Its Mounting Height

Solid state auto switch
<Band mounting>
D-M9□
D-M9□W
D-M9□A

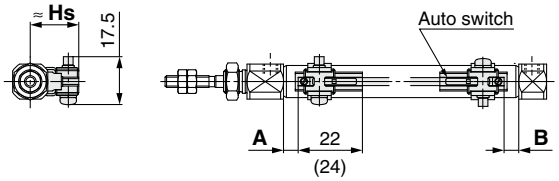

( ): Dimension of the D-M9□A.
A and B are the dimensions from the end of the head cover/rod cover to the end of the auto switch.

D-M9□V
D-M9□MV
D-M9□AV

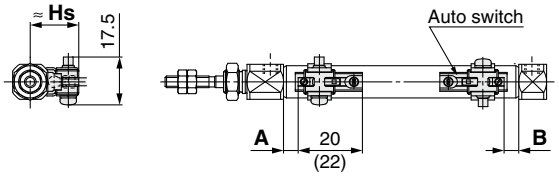

( ): Dimension of the D-M9□AV.
A and B are the dimensions from the end of the head cover/rod cover to the end of the auto switch.

D-H7□
D-H7□W
D-H7BA
D-H7NF
D-H7C

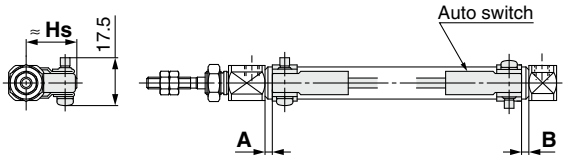

Reed auto switch
<Band mounting>

D-A9□

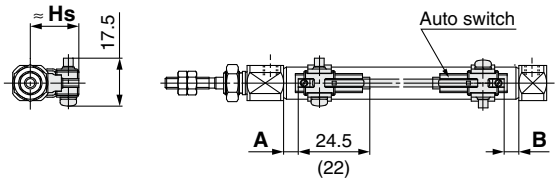

( ): Dimension of the D-A96.
A and B are the dimensions from the end of the head cover/rod cover to the end of the auto switch.

D-A9□V

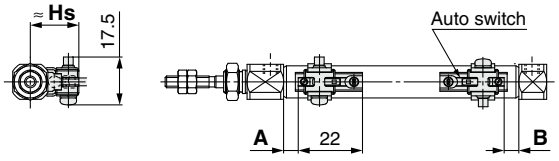

A and B are the dimensions from the end of the head cover/rod cover to the end of the auto switch.

D-C7□/C80
D-C73C□/C80C

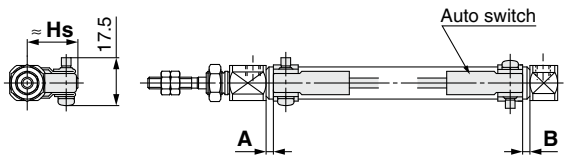

Auto Switch Proper Mounting Position (Detection at stroke end) and Its Mounting Height

<Rail mounting>
D-M9□
D-M9□W
D-M9□A

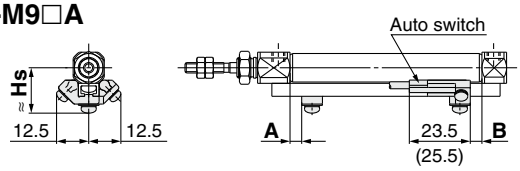

( ): Dimension of the D-M9□A.

D-M9□V
D-M9□WV
D-M9□AV

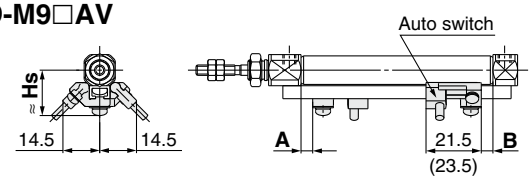

( ): Dimension of the D-M9□AV.

D-F7□/J79
D-F7□W/J79W
D-F79F/F7BA

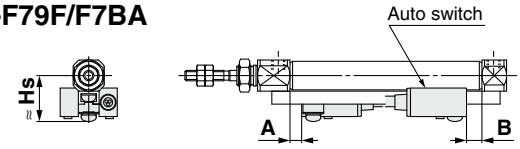

D-F7□V/F7□WV
D-F7BAV
D-J79C

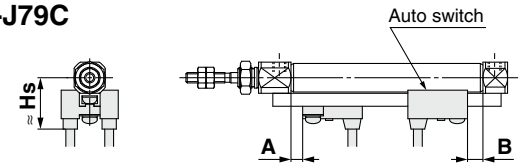

<Rail mounting>
D-A9□

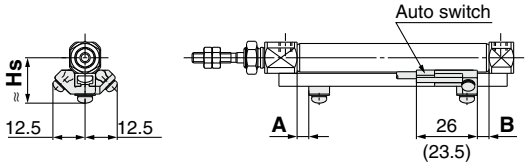

( ): Dimension of the D-A96.

D-A9□V

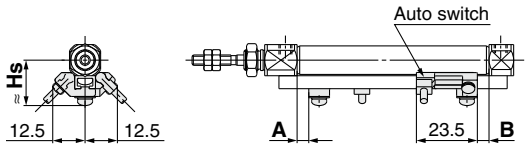

D-A7□/A80
D-A73C/A80C
D-A79W

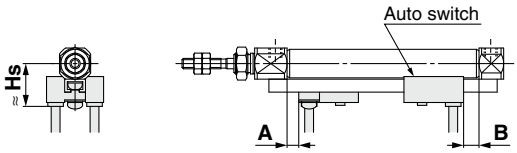

D-A7□H/A80H

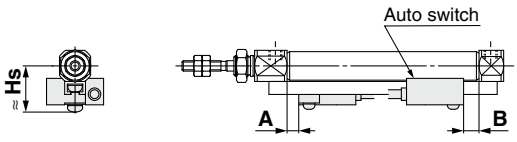

Auto Switch Proper Mounting Position (Detection at stroke end) and Its Mounting Height

Auto Switch Proper Mounting Position (Single acting type excluded) [mm]

Auto switch model / Bore size	Band mounting							
	D-M9□ D-M9□V D-M9□W D-M9□WV D-M9□A D-M9□AV		D-A9□ D-A9□V		D-H7□ D-H7C D-H7NF D-H7□W D-H7BA		D-C7□ D-C80 D-C73C D-C80C	
	A	B	A	B	A	B	A	B
6	5.5 (4.5) [12]	5.5 (4.5) [4]	1.5 (0.5) [8]	1.5 (0.5) [0]	1 (7.5)	1 (0)	2 (8.5)	2 (0.5)
10	(5) 6	(5) 6	(1) 2	(1) 2	1.5	1.5	2.5	2.5
16	(5.5) 6.5	(5.5) 6.5	(1.5) 2.5	(1.5) 2.5	2	2	3	3

∗: The values in ( ) are measured from the end of the auto switch mounting bracket.
∗: The values in [ ] for bore size ø6 are for the double rod type (CJ2W series).

[mm]

Auto switch model / Bore size	Rail mounting											
	D-M9□ D-M9□V D-M9□W D-M9□WV D-M9□A D-M9□AV		D-A9□ D-A9□V		D-F7□/J79 D-F7□W/J79W D-F7□V/F7□WV D-F79F D-J79C D-F7BA D-F7BAV D-A7□H/A80H D-A73C/A80C		D-F7NT		D-A7□ D-A80		D-A79W	
	A	B	A	B	A	B	A	B	A	B	A	B
6	—	—	—	—	—	—	—	—	—	—	—	—
10	4.5	4.5	0.5	0.5	3.5	3.5	8.5	8.5	3	3	0.5	0.5
16	5	5	1	1	4	4	9	9	3.5	3.5	1	1

∗: Adjust the auto switch after confirming the operating condition in the actual setting.

Auto Switch Mounting Height [mm]

Auto switch model / Bore size	Band mounting				
	D-M9□ D-M9□W D-M9□A D-A9□	D-M9□V D-M9□WV D-M9□AV D-A9□V	D-H7□/H7□W D-H7NF D-H7BA D-C7□/C80	D-H7C	D-C73C D-C80C
	Hs	Hs	Hs	Hs	Hs
6	15	16	15	18	17.5
10	17	18	17	20	19.5
16	20.5	21	20.5	23.5	23

[mm]

Auto switch model / Bore size	Rail mounting						
	D-M9□ D-M9□V D-M9□W D-M9□WV D-M9□A D-M9□AV D-A9□ D-A9□V	D-F7□/J79 D-F7□W/J79W D-F7BA/F79F D-F7NT D-A7□H/A80H	D-F7□V D-F7□WV D-F7BAV	D-J79C	D-A7□ D-A80	D-A73C D-A80C	D-A79W
	Hs	Hs	Hs	Hs	Hs	Hs	Hs
6	—	—	—	—	—	—	—
10	17.5	17.5	20	23	16.5	23.5	19
16	21	20.5	23	26	19.5	26.5	22

Auto Switch Proper Mounting Position (Detection at stroke end) and Its Mounting Height/Single Acting, Spring Return Type (S)

Auto Switch Proper Mounting Position: Spring Return Type (S)

· **Standard Type (CDJ2□□□-□SZ)**
· **Non-rotating Rod Type (CDJ2K□□□-□SZ)**
· **Direct Mount Type (CDJ2R□□□-□SZ)**
· **Direct Mount, Non-rotating Rod Type (CDJ2RK□□□-□SZ)**

[mm]

	Auto switch model	Bore size	A dimensions									B
			5 to 9 st	10 to 15 st	16 to 30 st	31 to 45 st	46 to 60 st	61 to 75 st	76 to 100 st	101 to 125 st	126 to 150 st	
Band mounting	D-M9□ D-M9□W/M9□WV D-M9□A/M9□AV	6	—	12	21	25	39	—	—	—	—	5.5
		10	—	13	20.5	32.5	44.5	—	—	—	—	6
		16	—	12.5	21	33	45	51	75	93	105	6.5
	D-M9□V	6	12	12	21	25	39	—	—	—	—	5.5
		10	13	13	20.5	32.5	44.5	—	—	—	—	6
		16	12.5	12.5	21	33	45	51	75	93	105	6.5
	D-A9□	6	—	8	17	21	35	—	—	—	—	1.5
		10	—	9	16.5	28.5	40.5	—	—	—	—	2
		16	—	8.5	17	29	41	47	71	89	101	2.5
	D-A9□V	6	8	8	17	21	35	—	—	—	—	1.5
		10	9	9	16.5	28.5	40.5	—	—	—	—	2
		16	8.5	8.5	17	29	41	47	71	89	101	2.5
	D-H7□/H7C D-H7□W/H7BA D-H7NF	6	—	7.5	16.5	20.5	34.5	—	—	—	—	1
		10	—	8.5	16	28	40	—	—	—	—	1.5
		16	—	8	16.5	28.5	40.5	46.5	70.5	88.5	100.5	2
	D-C7□/C80 D-C73C D-C80C	6	—	8.5	17.5	21.5	35.5	—	—	—	—	2
		10	—	9.5	17	29	41	—	—	—	—	2.5
		16	—	9	17.5	29.5	41.5	47.5	71.5	89.5	101.5	3
Rail mounting	D-M9□ D-M9□W/M9□WV D-M9□A/M9□AV	10	—	11.5	19	31	43	—	—	—	—	4.5
		16	—	11	19.5	31.5	43.5	49.5	73.5	91.5	103.5	5
	D-M9□V	10	11.5	11.5	19	31	43	—	—	—	—	4.5
		16	11	11	19.5	31.5	43.5	49.5	73.5	91.5	103.5	5
	D-A9□	10	—	7.5	15	27	39	—	—	—	—	0.5
		16	—	7	15.5	27.5	39.5	45.5	69.5	87.5	99.5	1
	D-A9□V	10	7.5	7.5	15	27	39	—	—	—	—	0.5
		16	7	7	15.5	27.5	39.5	45.5	69.5	87.5	99.5	1
	D-F7□/F7□V D-J79/J79C D-A7□H/A80H D-A73C/A80C	10	10.5	10.5	18	30	42	—	—	—	—	3.5
		16	10	10	18.5	30.5	42.5	48.5	72.5	90.5	102.5	4
	D-F7□W/J79W D-F7□WV/F79F D-F7BA/F7BAV	10	—	10.5	18	30	42	—	—	—	—	3.5
		16	—	10	18.5	30.5	42.5	48.5	72.5	90.5	102.5	4
	D-F7NT	10	—	15.5	23	35	47	—	—	—	—	8.5
		16	—	15	23.5	35.5	47.5	53.5	77.5	95.5	107.5	9
	D-A7□/A80	10	10	10	17.5	29.5	41.5	—	—	—	—	3
		16	9.5	9.5	18	30	42	48	72	90	102	3.5
	D-A79W	10	—	7.5	15	27	39	—	—	—	—	0.5
		16	—	7	15.5	27.5	39.5	45.5	69.5	87.5	99.5	1

∗: In the actual setting, adjust them after confirming the auto switch performance.

Auto Switch Proper Mounting Position (Detection at stroke end) and Its Mounting Height/Single Acting, Spring Extend Type (T)

Auto Switch Proper Mounting Position: Spring Extend Type (T)

- **Standard Type (CDJ2□□□-□TZ)**
- **Non-rotating Rod Type (CDJ2K□□□-□TZ)**
- **Direct Mount Type (CDJ2R□□□-□TZ)**
- **Direct Mount, Non-rotating Rod Type (CDJ2RK□□□-□TZ)**

[mm]

Auto switch model		Bore size	A	B dimensions								
				5 to 9 st	10 to 15 st	16 to 30 st	31 to 45 st	46 to 60 st	61 to 75 st	76 to 100 st	101 to 125 st	126 to 150 st
Band mounting	D-M9□ D-M9□W/M9□WV D-M9□A/M9□AV	6	5.5	—	12	21	25	39	—	—	—	—
		10	6	—	13	20.5	32.5	44.5	—	—	—	—
		16	6.5	—	12.5	21	33	45	51	75	93	105
	D-M9□V	6	5.5	12	12	21	25	39	—	—	—	—
		10	6	13	13	20.5	32.5	44.5	—	—	—	—
		16	6.5	12.5	12.5	21	33	45	51	75	93	105
	D-A9□	6	1.5	—	8	17	21	35	—	—	—	—
		10	2	—	9	16.5	28.5	40.5	—	—	—	—
		16	2.5	—	8.5	17	29	41	47	71	89	101
	D-A9□V	6	1.5	8	8	17	21	35	—	—	—	—
		10	2	9	9	16.5	28.5	40.5	—	—	—	—
		16	2.5	8.5	8.5	17	29	41	47	71	89	101
	D-H7□/H7C D-H7□W/H7BA D-H7NF	6	1	—	7.5	16.5	20.5	34.5	—	—	—	—
		10	1.5	—	8.5	16	28	40	—	—	—	—
		16	2	—	8	16.5	28.5	40.5	46.5	70.5	88.5	100.5
	D-C7□/C80 D-C73C D-C80C	6	2	—	8.5	17.5	21.5	35.5	—	—	—	—
		10	2.5	—	9.5	17	29	41	—	—	—	—
		16	3	—	9	17.5	29.5	41.5	47.5	71.5	89.5	101.5
Rail mounting	D-M9□ D-M9□W/M9□WV D-M9□A/M9□AV	10	4.5	—	11.5	19	31	43	—	—	—	—
		16	5	—	11	19.5	31.5	43.5	49.5	73.5	91.5	103.5
	D-M9□V	10	4.5	11.5	11.5	19	31	43	—	—	—	—
		16	5	11	11	19.5	31.5	43.5	49.5	73.5	91.5	103.5
	D-A9□	10	0.5	—	7.5	15	27	39	—	—	—	—
		16	1	—	7	15.5	27.5	39.5	45.5	69.5	87.5	99.5
	D-A9□V	10	0.5	7.5	7.5	15	27	39	—	—	—	—
		16	1	7	7	15.5	27.5	39.5	45.5	69.5	87.5	99.5
	D-F7□/F7□V D-J79/J79C D-A7□H/A80H D-A73C/A80C	10	3.5	10.5	10.5	18	30	42	—	—	—	—
		16	4	10	10	18.5	30.5	42.5	48.5	72.5	90.5	102.5
	D-F7□W/J79W D-F7□WV/F79F D-F7BA/F7BAV	10	3.5	—	10.5	18	30	42	—	—	—	—
		16	4	—	10	18.5	30.5	42.5	48.5	72.5	90.5	102.5
	D-F7NT	10	8.5	—	15.5	23	35	47	—	—	—	—
		16	9	—	15	23.5	35.5	47.5	53.5	77.5	95.5	107.5
	D-A7□/A80	10	3	10	10	17.5	29.5	41.5	—	—	—	—
		16	3.5	9.5	9.5	18	30	42	48	72	90	102
	D-A79W	10	0.5	—	7.5	15	27	39	—	—	—	—
		16	1	—	7	15.5	27.5	39.5	45.5	69.5	87.5	99.5

∗: In the actual setting, adjust them after confirming the auto switch performance.

Minimum Stroke for Auto Switch Mounting

[mm]

Auto switch mounting	Auto switch model	Number of auto switches				
		With 1 pc.	With 2 pcs.		With n pcs. (n: Number of auto switches)	
			Different surfaces	Same surface	Different surfaces	Same surface
Band mounting	**D-M9□** **D-M9□W** **D-M9□A** **D-A9□**	10	15∗1	45∗1	$15 + 35\frac{(n-2)}{2}$ (n = 2, 4, 6…)∗3	45 + 15 (n – 2) (n = 2, 3, 4, 5…)
	D-M9□V	5	15∗1	35	$15 + 35\frac{(n-2)}{2}$ (n = 2, 4, 6…)∗3	35 + 25 (n – 2) (n = 2, 3, 4, 5…)
	D-M9□WV **D-M9□AV**	10	15∗1	35	$15 + 35\frac{(n-2)}{2}$ (n = 2, 4, 6…)∗3	35 + 25 (n – 2) (n = 2, 3, 4, 5…)
	D-A9□V	5	10	35	$10 + 35\frac{(n-2)}{2}$ (n = 2, 4, 6…)∗3	35 + 25 (n – 2) (n = 2, 3, 4, 5…)
	D-H7□/H7□W **D-H7BA** **D-H7NF**	10	15	60	$15 + 45\frac{(n-2)}{2}$ (n = 2, 4, 6…)∗3	60 + 22.5 (n – 2) (n = 2, 3, 4, 5…)
	D-C7□ **D-C80**	10	15	50	$15 + 40\frac{(n-2)}{2}$ (n = 2, 4, 6…)∗3	50 + 20 (n – 2) (n = 2, 3, 4, 5…)
	D-H7C **D-C73C** **D-C80C**	10	15	65	$15 + 50\frac{(n-2)}{2}$ (n = 2, 4, 6…)∗3	50 + 27.5 (n – 2) (n = 2, 3, 4, 5…)
Rail mounting	**D-M9□V**	5	—	5	—	10 + 10 (n – 2) (n = 4, 6…)∗4
	D-A9□V	5	—	10	—	10 + 15 (n – 2) (n = 4, 6…)∗4
	D-M9□ **D-A9□**	10 (5)∗5	—	10	—	15 + 15 (n – 2) (n = 4, 6…)∗4
	D-M9□WV **D-M9□AV**	10	—	15	—	15 + 15 (n – 2) (n = 4, 6…)∗4
	D-M9□W	15 (10)∗5	—	15	—	20 + 15 (n – 2) (n = 4, 6…)∗4
	D-M9□A	15 (10)∗5	—	20 (15)∗5	—	20 + 15 (n – 2) (n = 4, 6…)∗4
	D-F7□ **D-J79**	5	—	5	—	15 + 15 (n – 2) (n = 4, 6…)∗4
	D-F7□V **D-J79C**	5	—	5	—	10 + 10 (n – 2) (n = 4, 6…)∗4
	D-F7□W/J79W **D-F7BA/F79F/F7NT**	10	—	15	—	15 + 20 (n – 2) (n = 4, 6…)∗4
	D-F7□WV **D-F7BAV**	10	—	15	—	10 + 15 (n – 2) (n = 4, 6…)∗4
	D-A7□/A80 **D-A7□H/A80H** **D-A73C/A80C**	5	—	10	—	15 + 10 (n – 2) (n = 4, 6…)∗4
	D-A7□H **D-A80H**	5	—	10	—	15 + 15 (n – 2) (n = 4, 6…)∗4
	D-A79W	10	—	15	—	10 + 15 (n – 2) (n = 4, 6…)∗4

∗3: When "n" is an odd number, an even number that is one larger than this odd number is used for the calculation.
∗4: When "n" is an odd number, an even number that is one larger than this odd number is used for the calculation. However, the minimum even number is 4. So, 4 is used for the calculation when "n" is 1 to 3.
∗5: The dimension stated in ( ) shows the minimum mountable stroke when the auto switch does not project from the end face of the cylinder body and the lead wire bending space is not hindered.

∗1: Auto switch mounting

Auto switch model	With 2 auto switches	
	Different surfaces∗1	Same surface∗1
	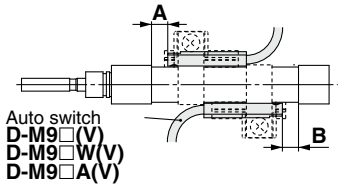 The proper auto switch mounting position is 5.5 mm inward from the switch holder edge. The above A and B indicate values for band mounting in the table of page 103.	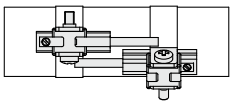 The auto switch is mounted by slightly displacing it in a direction (cylinder tube circumferential exterior) so that the auto switch and lead wire do not interfere with each other.
D-M9□/M9□W/M9□A	Less than 20 stroke∗2	Less than 55 stroke∗2
D-A9□	—	Less than 50 stroke∗2

∗2: Minimum stroke for auto switch mounting in styles other than those mentioned in ∗1.

Operating Range

[mm]

	Auto switch model	Bore size		
		6	10	16
Band mounting	D-M9□/M9□V D-M9□W/M9□WV D-M9□A/M9□AV	2	2.5	3
	D-A9□	4.5	6	7
	D-H7□/H7□W D-H7BA/H7NF	3	4	4
	D-H7C	5	8	9
	D-C7□/C80/C73C/C80C	6	7	7
Rail mounting	D-M9□/M9□V D-M9□W/M9□WV D-M9□A/M9□AV	—	3	3.5
	D-A9□/A9□V	—	6	6.5
	D-F7□/J79/F7□W/J79W D-F7□V/F7□WV/F79F D-J79C/F7BA/F7BAV D-F7NT	—	5	5
	D-A7□/A80/A7H/A80H D-A73C/A80C	—	8	9
	D-A79W	—	11	13

∗: Values which include hysteresis are for guideline purposes only, they are not a guarantee (assuming approximately ±30% dispersion) and may change substantially depending on the ambient environment.

Auto Switch Mounting Brackets/Part No.

Auto switch mounting	Auto switch model	Bore size [mm]		
		6	10	16
Band mounting	D-M9□ D-M9□V D-M9□W D-M9□WV D-A9□ D-A9□V	BJ6-006 (A set of a, b, d, f)	BJ6-010 (A set of a, b, c, d)	BJ6-016 (A set of a, b, c, d)
	D-M9□A ∗2 D-M9□AV∗2	BJ6-006S (A set of a, b, d, g)	BJ6-010S (A set of a, b, d, e)	BJ6-016S (A set of a, b, d, e)
Band mounting	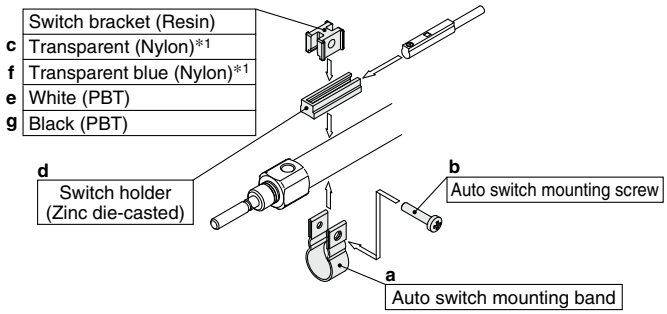			
Band mounting	D-H7□/H7□W D-H7BA/H7NF D-C7□/C80 D-C73C/C80C	BJ2-006 (A set of band and screw)	BJ2-010 (A set of band and screw)	BJ2-016 (A set of band and screw)
∗4 Rail mounting	D-M9□ D-M9□V D-M9□W D-M9□WV D-M9□A ∗4 D-M9□AV∗4 D-A9□ D-A9□V	—	BQ2-012 (S) (A set of a and b)	BQ2-012 (S) (A set of a and b)
			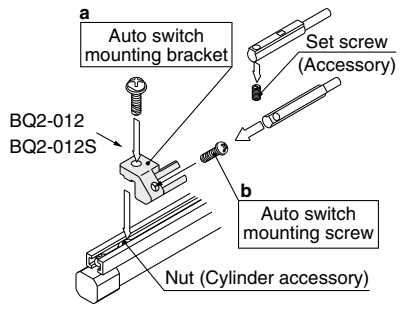	

∗1: Since the switch bracket (made from nylon) are affected in an environment where alcohol, chloroform, methylamines, hydrochloric acid or sulfuric acid is splashed over, so it cannot be used. Please contact SMC regarding other chemicals.

∗2: As the indicator LED is projected from the auto switch unit, indicator LED may be damaged if the switch bracket is fixed on the indicator LED.

∗3: When the cylinder is shipped, the auto switch mounting bracket and the auto switch will be included.

∗4: For D-M9□A(V), order the BQ2-012S, which uses stainless steel mounting screws.

Band Mounting Brackets Set Part No.

Set part no.	Contents	Bore size [mm]		
		6	10	16
BJ2-□□□	• Auto switch mounting band (a) • Auto switch mounting screw (b)	BJ2-006	BJ2-010	BJ2-016
BJ4-1	• Switch bracket (White/PBT) (e) • Switch holder (d)	—	●	●
BJ4-2	• Switch bracket (Black/PBT) (g) • Switch holder (d)	●	—	—
BJ5-1	• Switch bracket (Transparent/Nylon) (c)∗1 • Switch holder (d)	—	●	●
BJ5-2	• Switch bracket (Transparent blue/Nylon) (f)∗1 • Switch holder (d)	●	—	—

[Stainless Steel Mounting Screw]

The following stainless steel mounting screw kit is available. Use it in accordance with the operating environment. (Since the auto switch mounting bracket is not included, order it separately.)

BBA4: For D-C7/C8/H7 types

∗5: Refer to the **WEB catalog** or the Best Pneumatics No. 2 for details on the BBA4.

When the D-H7BA type auto switch is shipped independently, the BBA4 is attached.

Other than the applicable auto switches listed in "How to Order", the following auto switches are mountable.
Refer to the **WEB catalog** or the Best Pneumatics No.2 for the detailed specifications.

Type	Mounting	Model	Electrical entry	Features	Applicable bore size
Sold state	**Band mounting**	D-H7A1/H7A2/H7B	Grommet (In-line)	—	ø6 to ø16
		D-H7NW/H7PW/H7BW		Diagnostic indication (2-color indicator)	
	Rail mounting	D-F79/F7P/J79		—	ø10, ø16
		D-F79W/F7PW/J79W		Diagnostic indication (2-color indicator)	
		D-F7NV/F7PV/F7BV	Grommet (Perpendicular)	—	
		D-F7NWV/F7BWV		Diagnostic indication (2-color indicator)	
Reed	**Band mounting**	D-C73/C76	Grommet (In-line)	—	ø6 to ø16
		D-C80		Without indicator light	
	Rail mounting	D-A73H/A76H		—	ø10, ø16
		D-A80H		Without indicator light	
		D-A73	Grommet (Perpendicular)	—	
		D-A80		Without indicator light	

∗: With pre-wired connector is also available for solid state auto switches. For details, refer to the **WEB catalog** or the Best Pneumatics No. 2.
∗: Normally closed (NC = b contact) solid state auto switches (D-F9G/F9H) are also available. For details, refer to the **WEB catalog** or the Best Pneumatics No. 2.

Prior to Use
Auto Switch Connection and Example

Sink Input Specifications

3-wire, NPN

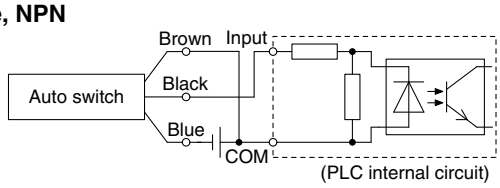

2-wire

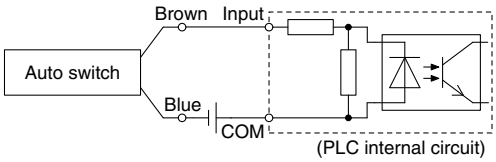

Source Input Specifications

3-wire, PNP

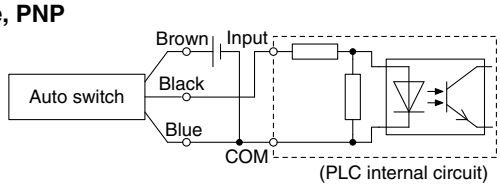

2-wire

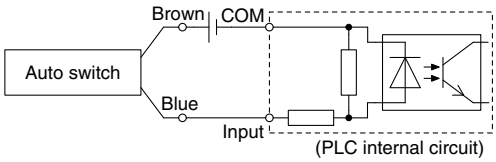

Connect according to the applicable PLC input specifications, as the connection method will vary depending on the PLC input specifications.

Example of AND (Series) and OR (Parallel) Connection

∗ When using solid state auto switches, ensure the application is set up so the signals for the first 50 ms are invalid.

3-wire AND connection for NPN output

(Using relays)

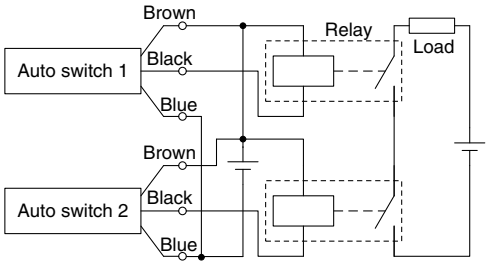

(Performed with auto switches only)

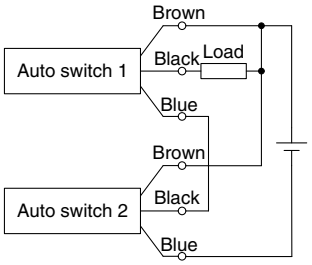

3-wire OR connection for NPN output

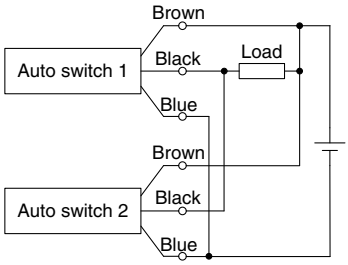

3-wire AND connection for PNP output

(Using relays)

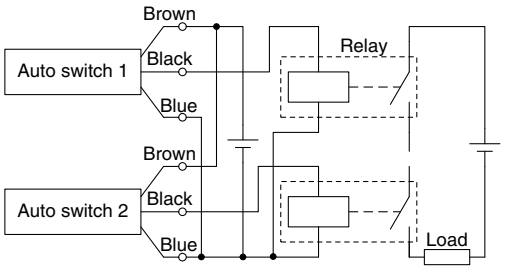

(Performed with auto switches only)

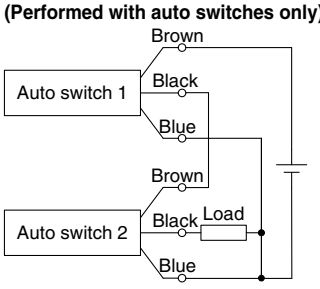

3-wire OR connection for PNP output

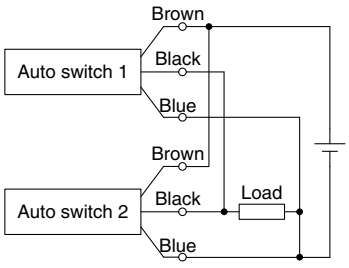

2-wire AND connection

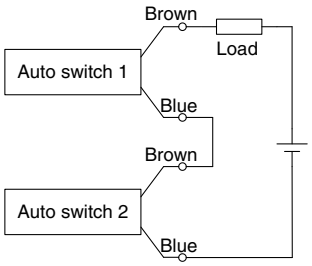

When two auto switches are connected in series, a load may malfunction because the load voltage will decline when in the ON state.
The indicator lights will light up when both of the auto switches are in the ON state.
Auto switches with load voltage less than 20 V cannot be used.

Load voltage at ON = Power supply voltage – Residual voltage x 2 pcs.
= 24 V – 4 V x 2 pcs.
= 16 V

Example: Power supply is 24 VDC
Internal voltage drop in auto switch is 4 V.

2-wire OR connection

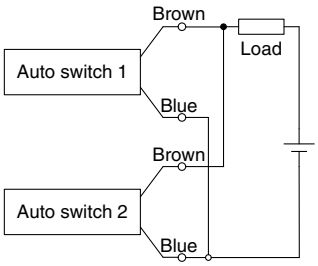

(Solid state)
When two auto switches are connected in parallel, malfunction may occur because the load voltage will increase when in the OFF state.

(Reed)
Because there is no current leakage, the load voltage will not increase when turned OFF. However, depending on the number of auto switches in the ON state, the indicator lights may sometimes grow dim or not light up, due to the dispersion and reduction of the current flowing to the auto switches.

Load voltage at OFF = Leakage current x 2 pcs. x Load impedance
= 1 mA x 2 pcs. x 3 kΩ
= 6 V

Example: Load impedance is 3 kΩ.
Leakage current from auto switch is 1 mA.

Simple Specials/Made to Order

Made to Order

Please contact SMC for detailed specifications, delivery and prices.

■Simple Specials

The following special specifications can be ordered as a simplified Made-to-Order.
There is a specification sheet available on paper and CD-ROM. Please contact your SMC sales representatives if necessary.

Symbol	Specifications	Applicable bore size	CJ2 (Standard type)				CJ2K (Non-rotating rod type)		
			Double acting		Single acting		Double acting	Single acting	
			Single rod	Double rod	Single rod (spring return)	Single rod (spring extend)	Single rod	Single rod (spring return)	Single rod (spring extend)
-XA0, 1, 10, 11	Change of rod end shape	ø6 to ø16	●	●	●	●	●	●	●

■Made to Order

Symbol	Specifications	Applicable bore size	CJ2 (Standard type)				CJ2K (Non-rotating rod type)		
			Double acting		Single acting		Double acting	Single acting	
			Single rod	Double rod	Single rod (spring return)	Single rod (spring extend)	Single rod	Single rod (spring return)	Single rod (spring extend)
-XB6	Heat resistant cylinder (–10 to 150°C)	ø6 to ø16	●	●					
-XB7	Cold resistant cylinder (–40 to 70°C)	ø6 to ø16	●	●					
-XB9	Low speed cylinder (10 to 50 mm/s)	ø6 to ø16	●						
-XB13	Low speed cylinder (5 to 50 mm/s)	ø6	●						
-XC3	Special port position	ø6 to ø16	●				●		
-XC8	Adjustable stroke cylinder/Adjustable extension type	ø10, ø16	●						
-XC9	Adjustable stroke cylinder/Adjustable retraction type	ø10, ø16	●				●		
-XC10	Dual stroke cylinder/Double rod type	ø10, ø16	●				●		
-XC11	Dual stroke cylinder/Single rod type	ø10, ø16	●						
-XC22	Fluororubber seal	ø6 to ø16	●	●	●	●	●		
-XC51	With hose nipple	ø6 to ø16	●	●	●	●	●	●	●
-XC85	Grease for food processing equipment	ø10, ø16	●	●	●	●	●	●	●
-X446	PTFE grease	ø10, ø16	●	●	●	●	●	●	●
-X773	Short pitch mounting	ø6			●				

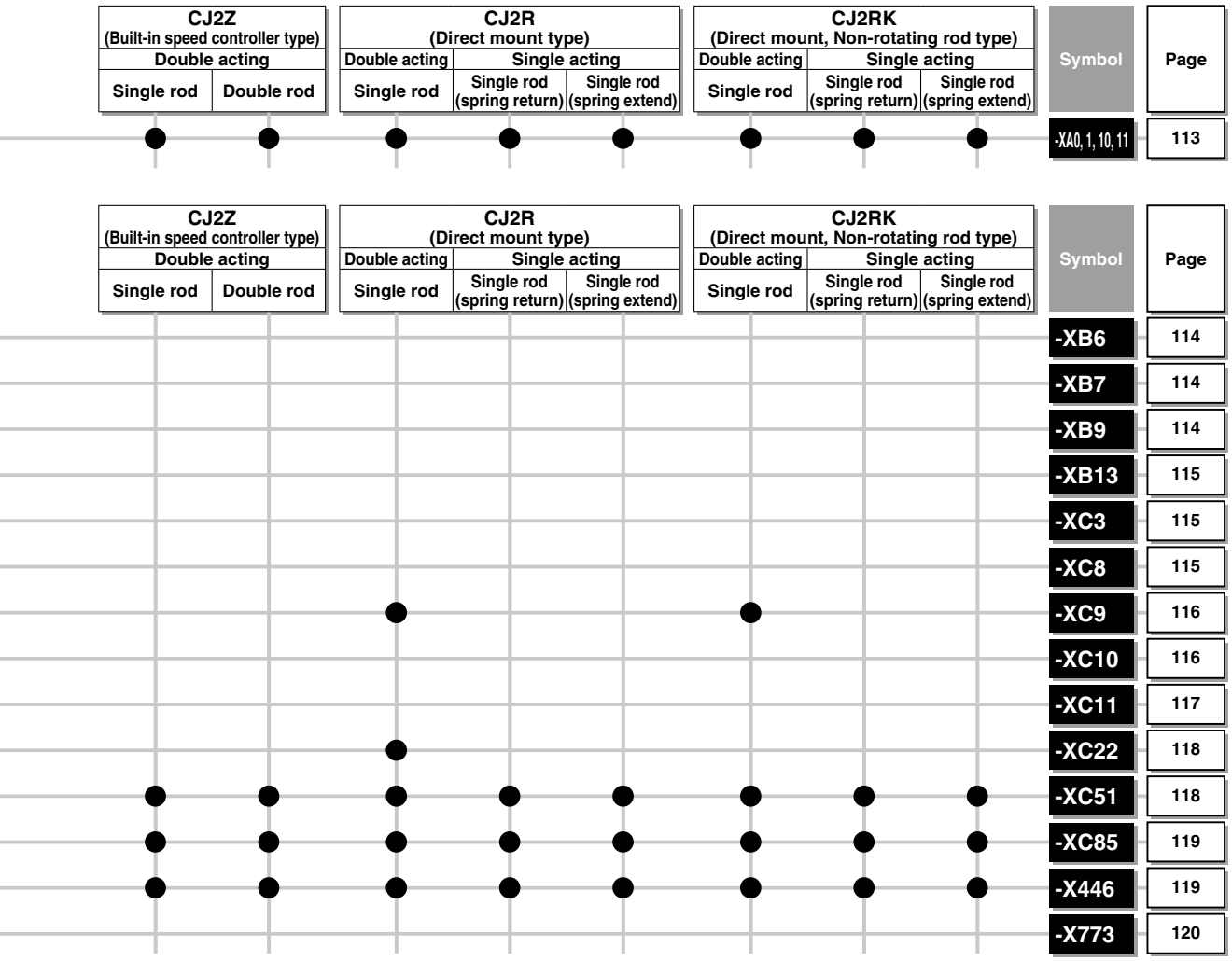
CJ2Z
(Built-in speed controller type)
Double acting
Single rod
Double rod
CJ2R
(Direct mount type)
Double acting
Single acting
Single rod
Single rod (spring return)
Single rod (spring extend)
CJ2RK
(Direct mount, Non-rotating rod type)
Double acting
Single acting
Single rod
Single rod (spring return)
Single rod (spring extend)
Symbol
Page
-XA0, 1, 10, 11
113
CJ2Z
(Built-in speed controller type)
Double acting
Single rod
Double rod
CJ2R
(Direct mount type)
Double acting
Single acting
Single rod
Single rod (spring return)
Single rod (spring extend)
CJ2RK
(Direct mount, Non-rotating rod type)
Double acting
Single acting
Single rod
Single rod (spring return)
Single rod (spring extend)
Symbol
Page
-XB6 114
-XB7 114
-XB9 114
-XB13 115
-XC3 115
-XC8 115
-XC9 116
-XC10 116
-XC11 117
-XC22 118
-XC51 118
-XC85 119
-X446 119
-X773 120

Series CJ2
Simple Specials

These changes are dealt with Simple Specials System.

For details, refer to the Simple Specials System in the WEB catalog.
http://www.smcworld.com

1 Change of Rod End Shape

Symbol
-XA0, 1, 10, 11

Applicable Series

		Action	Symbol for change of rod end shape	Note
Standard type	**CJ2**	Double acting, Single rod	XA0, 1, 10, 11	∗1
		Single acting (Spring return/extend)	XA0, 1, 10, 11	∗1
	CJ2W	Double acting, Double rod	XA0, 1, 10, 11	
Non-rotating rod type	**CJ2K**	Double acting, Single rod	XA0, 1, 10, 11	∗1
		Single acting (Spring return/extend)	XA0, 1, 10, 11	∗1
Built-in speed controller type	**CJ2Z**	Double acting, Single rod	XA0, 1, 10, 11	∗1
	CJ2ZW	Double acting, Double rod	XA0, 1, 10, 11	∗1
Direct mount type	**CJ2RA**	Double acting, Single rod	XA0, 1, 10, 11	∗2
		Single acting (Spring return/extend)	XA0, 1, 10, 11	∗2
Direct mount, Non-rotating rod type	**CJ2RK**	Double acting, Single rod	XA0, 1, 10, 11	∗2
		Single acting (Spring return/extend)	XA0, 1, 10, 11	∗2

∗1: Except rod end bracket and pivot bracket ∗2: Except rod end bracket

Precautions

1. SMC will make appropriate arrangements if no dimension, tolerance, or finish instructions are given in the diagram.
2. Standard dimensions marked with "∗" will be as follows to the rod diameter (D). Enter any special dimension you desire.
   D ≤ 6→D – 1 mm, 6 < D ≤ 25→D – 2 mm, D > 25→D – 4 mm
3. In the case of double rod type and single acting retraction type, enter the dimensions when the rod is retracted.

Symbol: A0

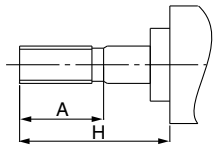

Symbol: A1

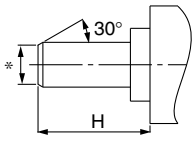

Symbol: A10

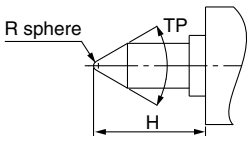

Symbol: A11

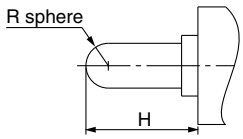

Series CJ2
Made to Order

Please contact SMC for detailed dimensions, specifications and lead times.

Made to Order

1 Heat Resistant Cylinder (–10 to 150°C)

Symbol **-XB6**

Air cylinder which changed the seal material and grease, so that it could be used even at higher temperature up to 150 from –10°C.

Applicable Series

Description	Model	Action	Note
Standard type	CJ2	Double acting, Single rod	Except with air cushion and auto switch
	CJ2W	Double acting, Double rod	Except with air cushion and auto switch

∗: Operate without lubrication from a pneumatic system lubricator.
∗: Please contact SMC for details on the maintenance intervals for this cylinder, which differ from those of the standard cylinder.
∗: In principle, it is impossible to make built-in magnet type and the one with auto switch. But, as for the one with auto switch, and the heat resistant cylinder with heat resistant auto switch, please contact SMC.
∗: Piston speed is ranged from 50 to 500 mm/s.

Specifications

Ambient temperature range	–10°C to 150°C
Seals material	Fluororubber
Grease	Heat resistant grease
Specifications other than above and external dimensions	Same as standard type

How to Order

Standard model no. – **XB6**

Heat resistant cylinder

⚠Warning

Precautions

Be aware that smoking cigarettes etc. after your hands have come into contact with the grease used in this cylinder can create a gas that is hazardous to humans.

2 Cold Resistant Cylinder (–40 to 70°C)

Symbol **-XB7**

Air cylinder which changed the seal material and grease, so that it could be used even at lower temperature down to – 40°C.

Applicable Series

Description	Model	Action	Note
Standard type	CJ2	Double acting, Single rod	Except with air cushion and auto switch, rod end bracket, pivot bracket
	CJ2W	Double acting, Double rod	Except with air cushion and auto switch

∗: Operate without lubrication from a pneumatic system lubricator.
∗: Use dry air which is suitable for heatless air dryer, etc. not to cause the moisture to be frozen.
∗: Please contact SMC for details on the maintenance intervals for this cylinder, which differ from those of the standard cylinder.
∗: Mounting auto switch is impossible.
∗: Piston speed is ranged from 50 to 500 mm/s.

Specifications

Ambient temperature range	–40°C to 70°C
Seals material	Low nitrile rubber
Grease	Cold resistant grease
Auto switch	Not mountable
Dimensions	Same as standard type
Additional specifications	Same as standard type

How to Order

Standard model no. – **XB7**

Cold resistant cylinder

⚠Warning

Precautions

Be aware that smoking cigarettes etc. after your hands have come into contact with the grease used in this cylinder can create a gas that is hazardous to humans.

3 Low Speed Cylinder (10 to 50 mm/s)

Symbol **-XB9**

Even if driving at lower speeds 10 to 50 mm/s, there would be no stick-slip phenomenon and it can run smoothly.

Applicable Series

Description	Model	Action	Note
Standard type	CJ2	Double acting, Single rod	Except with air cushion

Specifications

Piston speed	10 to 50 mm/s
Dimensions	Same as standard type
Additional specifications	Same as standard type

∗: Operate without lubrication from a pneumatic system lubricator.

How to Order

Standard model no. – **XB9**

Low speed cylinder

⚠Warning

Precautions

Be aware that smoking cigarettes etc. after your hands have come into contact with the grease used in this cylinder can create a gas that is hazardous to humans.

Symbol
4 Low Speed Cylinder (5 to 50 mm/s) -XB13

Even if driving at lower speeds 5 to 50 mm/s, there would be no stick-slip phenomenon and it can run smoothly.

Applicable Series

Description	Model	Action	Note
Standard type	CJ2	Double acting, Single rod	ø6 only

∗: Operate without lubrication from a pneumatic system lubricator.
∗: For the speed adjustment, use speed controllers for controlling at lower speeds. (AS-FM/AS-M series)

How to Order

Standard model no. **−XB13**

Low speed cylinder

Specifications

Piston speed	5 to 50 mm/s
Dimensions	Same as standard type
Additional specifications	Same as standard type

⚠Warning
Precautions

Be aware that smoking cigarettes etc. after your hands have come into contact with the grease used in this cylinder can create a gas that is hazardous to humans.

Symbol
5 Special Port Location -XC3

Compared with the standard type, a cylinder which changes the connection port location of rod/head cover.

Applicable Series

Description	Model	Action	Note
Standard type	CJ2	Double acting, Single rod	Except with rail mounting type auto switches, with air cushion
Non-rotating rod type	CJ2K	Double acting, Single rod	Except with rail mounting type auto switches

How to Order

Standard model no. **− XC3** **A** **B**

Special port location

Rod port location viewed from the rod side

∗: For port location, refer to the diagrams on the right and show the symbols of A, B, C and D.

Head port location viewed from the rod side

Specifications: Same as standard type

Port Location

Corresponding symbol of mounting bracket (Positional relationships)

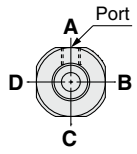

∗: Viewed from the rod side, the ports are rendered A, B, C, and D, in the clockwise direction.

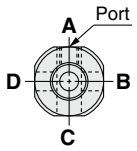

<Position relation between clevis and port>
∗: Viewed from the rod side, with the clevis positioned as shown in the diagram, the ports are rendered A, B, C, and D, in the clockwise direction.

Symbol
6 Adjustable Stroke Cylinder/Adjustable Extension Type -XC8

It adjusts the extending stroke by the stroke adjustable mechanism equipped in the head side. (After the stroke is adjusted, with cushion on both sides is altered to single-sided, with cushion.)

Applicable Series

Description	Model	Action	Note
Standard type	CJ2	Double acting, Single rod	Except with air cushion, double-side bossed, double clevis, double foot, head flange.

How to Order

Standard model no. **− XC8**

Adjustable stroke cylinder/ Adjustable extension type

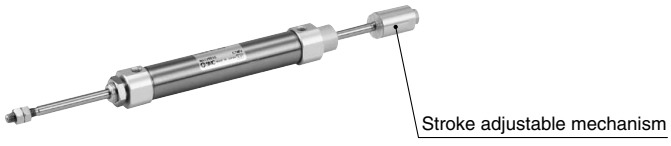

Specifications

Stroke adjustment symbol	—
Stroke adjustment range [mm]	0 to 15
Additional specifications	Same as standard type

⚠Warning
Precautions

1. When the cylinder is operating, if something gets caught between the stopper bracket for adjusting the stroke and the cylinder body, it could cause bodily injury or damage the peripheral equipment. Therefore, take preventive measures as necessary, such as installing a protective cover.
2. To adjust the stroke, make sure to secure the wrench flats of the stopper bracket by a wrench etc. before loosening the lock nut. If the lock nut is loosened without securing the stopper bracket, be aware that the area that joins the load to the piston rod or the area in which the piston rod is joined with the load side and the stopper bracket side could loosen first. It may cause an accident or malfunction.

Dimensions (Dimensions other than below are the same as standard type.)

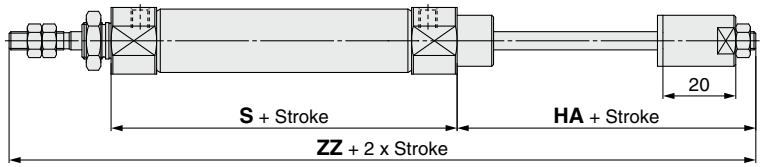

[mm]

Bore size	Applicable stroke	HA	S	ZZ
10	15 to 150	37	49	114
16	15 to 200	37	50	115

∗: Dimensions except mentioned above are the same as standard type.

7 Adjustable Stroke Cylinder/Adjustable Retraction Type

Symbol **-XC9**

The retracting stroke of the cylinder can be adjusted by the adjusting bolt.

Applicable Series

Description	Model	Action	Note
Standard type	CJ2	Double acting, Single rod	Except double-side bossed, double clevis, double foot, head flange.
Non-rotating rod type	CJ2K	Double acting, Single rod	Except double-side bossed, double clevis, double foot, head flange.
Direct mount type	CJ2R	Double acting, Single rod	
Direct mount, Non-rotating rod type	CJ2RK	Double acting, Single rod	

Specifications

Stroke adjustment symbol	—
Stroke adjustment range [mm]	0 to 15
Additional specifications	Same as standard type

⚠Caution
Precautions

1. When air is supplied to the cylinder, if the stroke adjusting bolt is loosened in excess of the allowable stroke adjustment amount, be aware that the stroke adjusting bolt could fly out or air could be discharged, which could injure personnel or damage the peripheral equipment.
2. Adjust the stroke when the cylinder is not pressurized.
   If it is adjusted in the pressurized state, the seal of the adjustment section could become deformed, leading to air leakage.

How to Order

Standard model no. – XC9

Adjustable stroke cylinder/ Adjustable retraction type

Dimensions (Dimensions other than below are the same as standard type.)

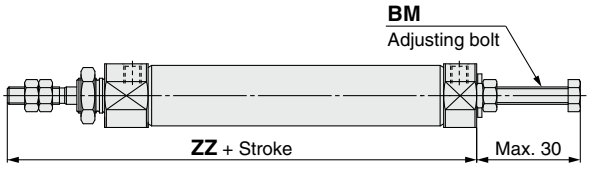

[mm]

Bore size	BM	ZZ
10	M5 x 0.8	74
16	M5 x 0.8	75

∗: Dimensions except mentioned above are the same as standard type.

8 Dual Stroke Cylinder/Double Rod Type

Symbol **-XC10**

Two cylinders are constructed as one cylinder in a back-to-back configuration allowing the cylinder stroke to be controlled in three steps.

Applicable Series

Description	Model	Action	Note
Standard type	CJ2	Double acting, Single rod	Except with air cushion, rod end bracket and pivot bracket
Non-rotating rod type	CJ2K	Double acting, Single rod	Except rod end bracket and pivot bracket

Specifications

Maximum manufacturable stroke [mm]	300 (Maximum 150 on one side)
Additional specifications	Same as standard type

How to Order

CJ2 | Mounting | Bore size | – | Stroke A | + | Stroke B | Z – XC10

Dual stroke cylinder/Double rod type

Dimensions (Dimensions other than below are the same as standard type.)

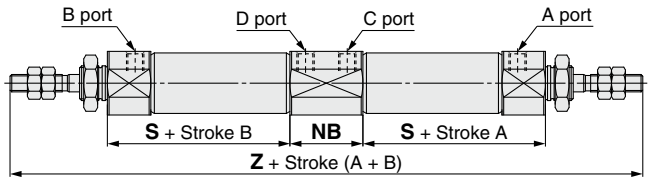

[mm]

Bore size	NB	S	Z
10	21	36.5	150
16	21	37.5	152

Function

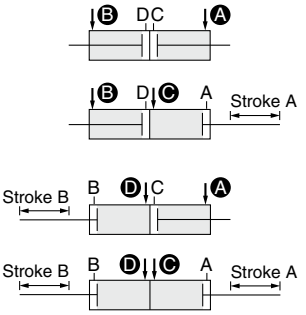

When air pressure is supplied to ports A and B, both strokes A and B retract.

When air pressure is supplied to ports B and C, A out strokes.

When air pressure is supplied to ports A and D, B out strokes.

When air pressure is supplied to ports C and D, both strokes A and B out strokes.

Symbol
-XC11

9 Dual Stroke Cylinder/Single Rod Type

Two cylinders can be integrated by connecting them in line, and the cylinder stroke can be controlled in two stages in both directions.

Applicable Series

Description	Model	Action	Note
Standard type	CJ2	Double acting, Single rod	Except with air cushion

Specifications: Same as standard type

∗: Please contact SMC for each manufacturable stroke length.

How to Order

CJ2 | Mounting | Bore size | − | Stroke A | + | Stroke B − A | Z − | Pivot bracket | Rod end bracket | − XC11

Dual stroke cylinder/Single rod type

⚠Caution

Precautions

1. Do not supply air until the cylinder is fixed.
2. If air is supplied without securing the cylinder, the cylinder could lurch, posing the risk of bodily injury or damage to the peripheral equipment.

Dimensions (Dimensions other than below are the same as standard type.)

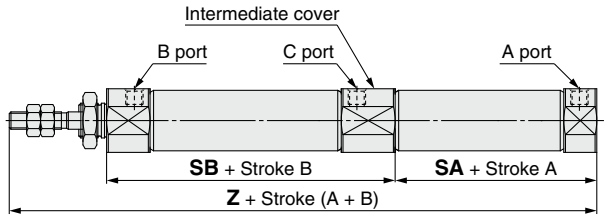

[mm]

Bore size	SA	SB	Z
10	31.5	53	112.5
16	33	53	114

∗: Dimensions except mentioned above are the same as standard type.

∗: When mounting an auto switch at the extended piston rod A side, the following auto switches interfere with the intermediate cover. In this case, please mount on the stroke B side. Please be aware that the auto switch defects and temporarily turns ON/OFF when passing the intermediate position of the B stroke.
Solid state auto switch: D-H7□, D-H7C, D-H7□W, D-H7NF, D-H7BA
Reed auto switch: D-C7□, D-C80, D-C73C, D-C80C, D-A80, D-A9□, D-A9□V, D-A79W, D-A73

∗: The maximum manufacturable stroke of this cylinder is 150 mm for both A and B.

Functional description of dual stroke cylinder

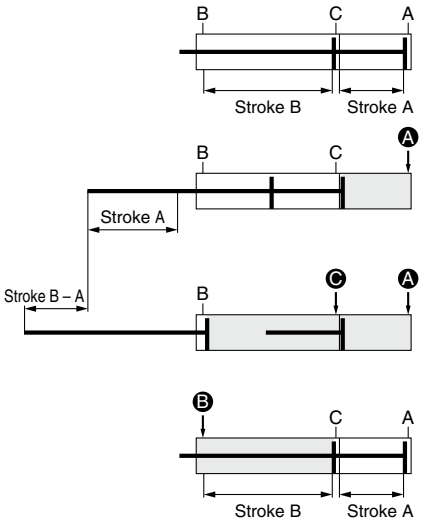

1) Initial state
(0 stroke position)

2) 1st stage
(Stroke A operation)
When the air pressure is supplied from the Ⓐ port, the rod operates the stroke A.

3) 2nd stage
(Stroke B-A operation)
Following the 1st stage, when the air pressure is supplied from the Ⓒ port, the rod operates the stroke B-A.

4) Cylinder retraction
When the air pressure is supplied from the Ⓑ port, the rod retracts completely.

Stroke A or Stroke B operation can be made individually.

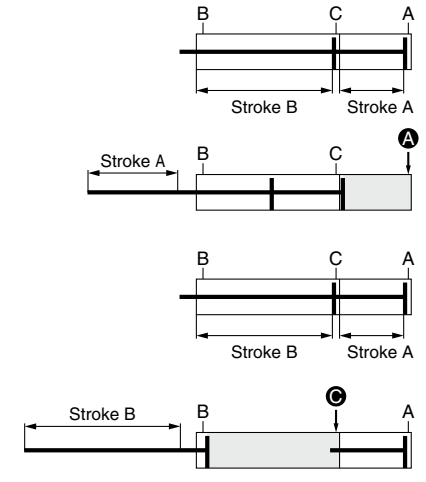

Stroke A operation

1) Initial state
(0 stroke position)

2) Operation
When the air pressure is supplied from the Ⓐ port, the rod operates the stroke A.

Stroke B operation

1) Initial state
(0 stroke position)

2) Operation
When the air pressure is supplied from the Ⓒ port, the rod operates the stroke B.

Double output is possible.

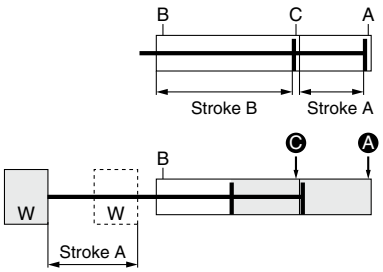

1) Initial state
(0 stroke position)

2) Double output
When the air pressure is supplied to the Ⓐ and Ⓒ ports at the same time, the double output can be obtained in the stroke A range.

10 Fluororubber Seal

Symbol **-XC22**

Applicable Series

Description	Model	Action	Note
Standard type	CJ2	Double acting, Single rod	Except with air cushion
		Single acting (Spring return/extend)	
	CJ2W	Double acting, Double rod	Except with air cushion
Non-rotating rod type	CJ2K	Double acting, Single rod	
Direct mount type	CJ2R	Double acting, Single rod	

Specifications

Seal material	Fluororubber
Ambient temperature range	With auto switch*1: −10°C to 60°C Without auto switch: −10°C to 70°C (No freezing)
Specifications other than above and external dimensions	Same as standard type

*1: Please contact SMC, as the type of chemical and the operating temperature may not allow the use of this product.

*2: Cylinders with auto switches can also be produced; however, auto switch related parts (auto switch units, mounting brackets, built-in magnets) are the same as standard products.
Before using these, please contact SMC regarding their suitability for the operating environment.

How to Order

Standard model no. **− XC22**

Fluororubber seal

11 With Hose Nipple

Symbol **-XC51**

The one with hose nipple attached in order to save time for assembly at the time of shipment.

Applicable Series

Description	Model	Action	Note
Standard type	CJ2	Double acting, Single rod	
		Single acting (Spring return/extend)	
	CJ2W	Double acting, Double rod	
Non-rotating rod type	CJ2K	Double acting, Single rod	
		Single acting (Spring return/extend)	
Built-in speed controller type	CJ2Z	Double acting, Single rod	
	CJ2ZW	Double acting, Double rod	
Direct mount type	CJ2R	Double acting, Single rod	
		Single acting (Spring return/extend)	
Direct mount, Non-rotating rod type	CJ2RK	Double acting, Single rod	
		Single acting (Spring return/extend)	

Specifications: Same as standard type

Applicable Hose Nipple Type

Symbol	Applicable bore size [mm]	Function	Hose nipple part no.
H4	ø4/2.5	With a fixed orifice (ø0.8)	CJ-5H-4
H6	ø6/4		CJ-5H-6
MH4	ø4/2.5	Without fixed orifice	M-5H-4
MH6	ø6/4		M-5H-6

How to Order

Standard model no. **− XC51** **H4**

With hose nipple

Hose nipple type

H4	ø4/2.5 with restrictor
H6	ø6/4 with restrictor
MH4	ø4/2.5 without restrictor
MH6	ø6/4 without restrictor

Dimensions (Dimensions other than below are the same as standard type.)

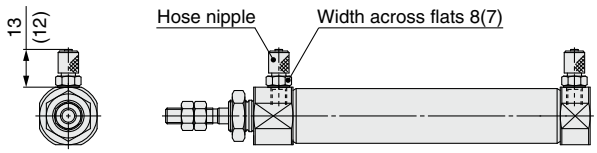

*: The above figure shows the ø6/4 hose nipple mounting dimensions. The dimensions in ( ) show those for the ø4/2.5 hose nipple.

Symbol
12 Grease for Food Processing Equipment -XC85

Food grade grease (certified by NSF-H1) is used as lubricant.

Applicable Series

Description	Model	Action	Note
Standard type	CJ2	Double acting, Single rod	
		Single acting (Spring return/extend)	
	CJ2W	Double acting, Double rod	
Non-rotating rod type	CJ2K	Double acting, Single rod	
		Single acting (Spring return/extend)	
Built-in speed controller type	CJ2Z	Double acting, Single rod	
	CJ2ZW	Double acting, Double rod	
Direct mount type	CJ2R	Double acting, Single rod	
		Single acting (Spring return/extend)	
Direct mount, Non-rotating rod type	CJ2RK	Double acting, Single rod	
		Single acting (Spring return/extend)	

How to Order

Standard model no. – **XC85**

Grease for food processing equipment

Specifications

Ambient temperature range	With auto switch: –10°C to 60°C Without auto switch: –10°C to 70°C (No freezing)
Seals material	Nitrile rubber
Grease	Grease for food
Auto switch	Mountable
Dimensions	Same as standard type
Specifications other than above	Same as standard type

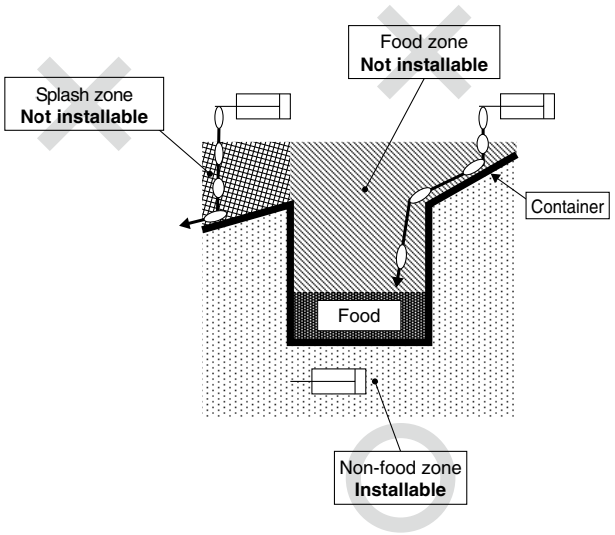

∗: Avoid using this product in the food zone. (Refer to the figure above.)
∗: When the product is used in an area of liquid splash, or a water resistant function is required for the product, please consult with SMC.
∗: Operate without lubrication from a pneumatic system lubricator.
∗: Use the following grease pack for the maintenance work.
GR-H-010 (Grease: 10 g)
∗: Please contact SMC for details on the maintenance intervals for this cylinder, which differ from those of the standard cylinder.

⚠Warning
Precautions

Be aware that smoking cigarettes etc. after your hands have come into contact with the grease used in this cylinder can create a gas that is hazardous to humans.

Not installable zone

Food zone·····An environment where the raw materials and materials of food products, semi-finished food products and food products that make direct or indirect contact in a normal processing process.

Splash zone·····An area where a portion of food products accidentally splash and stick under the intended operating conditions. An environment where food products that enter this area do not return to the food product contact portion again, and are not used as food products.

Installable zone

Non-food zone···Other environments including the food splash zone, except for the food contact portions.

Symbol
13 PTFE Grease -X446

Applicable Series

Description	Model	Action	Note
Standard type	CJ2	Double acting, Single rod	
		Single acting (Spring return/extend)	
	CJ2W	Double acting, Double rod	
Non-rotating rod type	CJ2K	Double acting, Single rod	
		Single acting (Spring return/extend)	
Built-in speed controller type	CJ2Z	Double acting, Single rod	
	CJ2ZW	Double acting, Double rod	
Direct mount type	CJ2R	Double acting, Single rod	
		Single acting (Spring return/extend)	
Direct mount, Non-rotating rod type	CJ2RK	Double acting, Single rod	
		Single acting (Spring return/extend)	

How to Order

Standard model no. – **X446**

PTFE grease

Specifications: Same as standard type

Dimensions: Same as standard type

∗: When grease is necessary for maintenance, grease pack is available, please order it separately.
GR-F-005 (Grease: 5 g)

⚠Warning
Precautions

Be aware that smoking cigarettes etc. after your hands have come into contact with the grease used in this cylinder can create a gas that is hazardous to humans.

Symbol
-X773

14 Short Pitch Mounting/Single Acting, Spring Return

Mounting pitch is shortened when cylinders are used in parallel.

■ Changes rod cover and head cover dimensions to ø7.
■ Shortens the full length with a head cover integrated with a barb fitting.

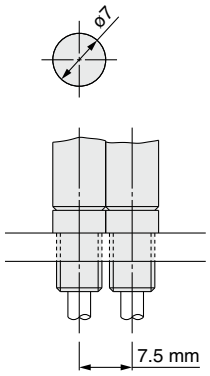

∗: Directly mounted with cylinder mounting screws

Application example

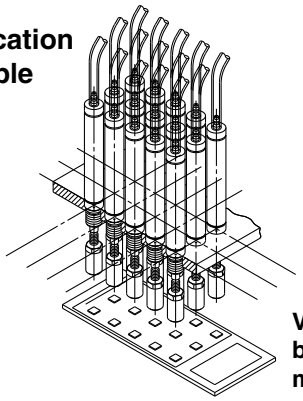

Verification of push button actuation for mobile phones etc.

Applicable Series

Description	Model	Action	Note
Standard type	CJ2	Single acting (Spring return)	

Specifications

Bore size [mm]	6
Action	Single acting, Spring return
Operating pressure range	0.2 to 0.7 MPa
Port size	With ø4 barb fitting (For soft tube)
Connecting port location	Head cover/Axial direction
Stroke [mm]	5 to 60
Auto switch	None

How to Order

CJ2B6 − Stroke SU4Z − X773

Short pitch mounting/ Single acting, spring return

Dimensions

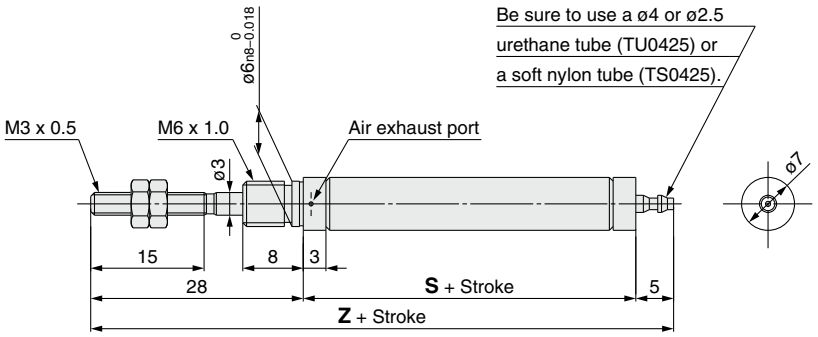

[mm]

Stroke	5 to 15	16 to 30	31 to 45	46 to 60
S	30.5	39.5	43.5	57.5
Z	63.5	72.5	76.5	90.5

Note
1. When mounting a cylinder, make sure that the air exhaust port on the rod cover is not blocked.
2. When mounting a cylinder, apply thread locking adhesive on the threaded part and hold the external diameter of the rod cover with a needle-nose pliers or regular pliers.

Specific Product Precautions

Be sure to read this before handling. Refer to the back cover for Safety Instructions. For Actuator and Auto Switch Precautions, refer to "Handling Precautions for SMC Products" and the Operation Manual on SMC website, http://www.smcworld.com

Mounting

⚠Warning

1. Use within the specified cylinder speed and kinetic energy ranges.

Otherwise, cylinder and seal damage may occur.

2. Do not apply excessive lateral load to the piston rod.

Easy checking method

Minimum operating pressure after the cylinder is mounted to the equipment (MPa) = Minimum operating pressure of cylinder (MPa) + {Load weight (kg) x Friction coefficient of guide/Sectional area of cylinder (mm^2)}

If smooth operation is confirmed within the above value, the load on the cylinder is the resistance of the thrust only and it can be judged as having no lateral load.

⚠Caution

1. During installation, secure the cover on the tightening side and tighten by applying an appropriate tightening force to the retaining nut or to the cover on the tightening side.

If the cover on the opposite side of the tightening side is secured or tightened, the cover could rotate, leading to the deviation.

2. Tighten the retaining screws to an appropriate tightening torque within the range given below.

ø6: 2.1 to 2.5 N·m, ø10: 5.9 to 6.4 N·m

ø16: 10.8 to 11.8 N·m

3. To remove and install the retaining ring for the knuckle pin or the clevis pin, use an appropriate pair of pliers (tool for installing a type C retaining ring). In particular, use a pair of ultra-mini pliers for removing and installing the retaining ring on the ø10 cylinder.

4. In the case of auto switch rail mounting type, do not remove the rail that is mounted. Because retaining screws extend into the cylinder, this could lead to an air leak.

5. Please contact SMC when the stroke exceeds 100 mm for the axial foot mounting type.

<Precautions on the single acting cylinder>

1) Do not operate it in such a way that a load would be applied during the retraction of the piston rod of the spring return style, or during the extension of the piston rod of the spring extend style. The spring that is built into the cylinder provides only enough force to retract the piston rod. Thus, if a load is applied, the piston rod will not be able to retract to the end of the stroke.

2) A breather hole is provided in the cover surface. Make sure not to block this hole during installation, as this could lead to a malfunction.

<Precautions on the non-rotating cylinder>

1) Tighten the retaining screws to an appropriate tightening torque within the range given below.
ø10: 10.8 to 11.8 N·m, ø16: 20 to 21 N·m

2) Do not operate it in such a way that rotational torque would be applied to the piston rod. If rotational torque is applied, the non-rotating guide will become deformed, thus affecting the non-rotating accuracy.

Allowable rotational torque [N·m]	ø10	ø16
	0.02	0.04

3) To screw a bracket onto the threaded portion at the tip of the piston rod, make sure to retract the piston rod entirely, and place a wrench over the flat portion of the rod that protrudes. To tighten, take precautions to prevent the tightening torque from being applied to the non-rotating guide.

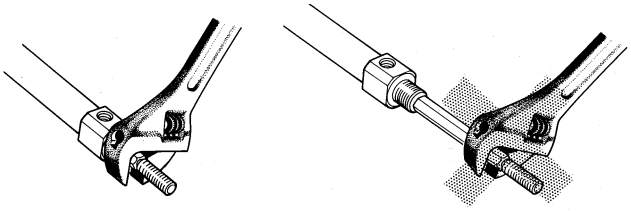

Revision history

Edition B	* Standard type (Double rod, Single acting), Non-rotating rod type, Direct mount type, Direct mount, Non-rotating rod type, Made to Order: Heat resistant cylinder (-XB6), Dual stroke cylinder (-XC10, 11) etc. are added. * Number of pages increased from 20 to 104.	RW
Edition C	* The existing product (ø6) and the air cylinder with end lock (CBJ2 series) are added. * The models with rod end bracket and/or pivot bracket part numbers are added: CJ2-Z (Single acting), CJ2K-Z (Double acting, Single acting), CJ2Z-Z, CJ2R-Z (Double acting, Single acting), CJ2RK-Z (Double acting, Single acting) * Number of pages increased from 104 to 120.	SX
Edition D	* ø6 is added to the single rod, double rod and single acting of the CJ2-Z series standard type. * Double foot, head flange, double-side bossed are added to the mounting types of ø6. * The head cover port location “Perpendicular to axis” is added to ø6. * Number of pages increased from 120 to 124.	UP

⚠ Safety Instructions

These safety instructions are intended to prevent hazardous situations and/or equipment damage. These instructions indicate the level of potential hazard with the labels of **"Caution," "Warning"** or **"Danger."** They are all important notes for safety and must be followed in addition to International Standards (ISO/IEC)*1), and other safety regulations.

⚠ Caution: **Caution** indicates a hazard with a low level of risk which, if not avoided, could result in minor or moderate injury.

⚠ Warning: **Warning** indicates a hazard with a medium level of risk which, if not avoided, could result in death or serious injury.

⚠ Danger : **Danger** indicates a hazard with a high level of risk which, if not avoided, will result in death or serious injury.

*1) ISO 4414: Pneumatic fluid power – General rules relating to systems.
ISO 4413: Hydraulic fluid power – General rules relating to systems.
IEC 60204-1: Safety of machinery – Electrical equipment of machines.
(Part 1: General requirements)
ISO 10218-1: Manipulating industrial robots – Safety.
etc.

⚠ Warning

1. The compatibility of the product is the responsibility of the person who designs the equipment or decides its specifications.

Since the product specified here is used under various operating conditions, its compatibility with specific equipment must be decided by the person who designs the equipment or decides its specifications based on necessary analysis and test results. The expected performance and safety assurance of the equipment will be the responsibility of the person who has determined its compatibility with the product. This person should also continuously review all specifications of the product referring to its latest catalog information, with a view to giving due consideration to any possibility of equipment failure when configuring the equipment.

2. Only personnel with appropriate training should operate machinery and equipment.

The product specified here may become unsafe if handled incorrectly. The assembly, operation and maintenance of machines or equipment including our products must be performed by an operator who is appropriately trained and experienced.

3. Do not service or attempt to remove product and machinery/ equipment until safety is confirmed.

1. The inspection and maintenance of machinery/equipment should only be performed after measures to prevent falling or runaway of the driven objects have been confirmed.
2. When the product is to be removed, confirm that the safety measures as mentioned above are implemented and the power from any appropriate source is cut, and read and understand the specific product precautions of all relevant products carefully.
3. Before machinery/equipment is restarted, take measures to prevent unexpected operation and malfunction.

4. Contact SMC beforehand and take special consideration of safety measures if the product is to be used in any of the following conditions.

1. Conditions and environments outside of the given specifications, or use outdoors or in a place exposed to direct sunlight.
2. Installation on equipment in conjunction with atomic energy, railways, air navigation, space, shipping, vehicles, military, medical treatment, combustion and recreation, or equipment in contact with food and beverages, emergency stop circuits, clutch and brake circuits in press applications, safety equipment or other applications unsuitable for the standard specifications described in the product catalog.
3. An application which could have negative effects on people, property, or animals requiring special safety analysis.
4. Use in an interlock circuit, which requires the provision of double interlock for possible failure by using a mechanical protective function, and periodical checks to confirm proper operation.

⚠ Caution

1. The product is provided for use in manufacturing industries.

The product herein described is basically provided for peaceful use in manufacturing industries.
If considering using the product in other industries, consult SMC beforehand and exchange specifications or a contract if necessary.
If anything is unclear, contact your nearest sales branch.

Limited warranty and Disclaimer/ Compliance Requirements

The product used is subject to the following "Limited warranty and Disclaimer" and "Compliance Requirements".
Read and accept them before using the product.

Limited warranty and Disclaimer

1. The warranty period of the product is 1 year in service or 1.5 years after the product is delivered, whichever is first.*2)
   Also, the product may have specified durability, running distance or replacement parts. Please consult your nearest sales branch.
2. For any failure or damage reported within the warranty period which is clearly our responsibility, a replacement product or necessary parts will be provided.
   This limited warranty applies only to our product independently, and not to any other damage incurred due to the failure of the product.
3. Prior to using SMC products, please read and understand the warranty terms and disclaimers noted in the specified catalog for the particular products.

*2) **Vacuum pads are excluded from this 1 year warranty.**
A vacuum pad is a consumable part, so it is warranted for a year after it is delivered.
Also, even within the warranty period, the wear of a product due to the use of the vacuum pad or failure due to the deterioration of rubber material are not covered by the limited warranty.

Compliance Requirements

1. The use of SMC products with production equipment for the manufacture of weapons of mass destruction (WMD) or any other weapon is strictly prohibited.
2. The exports of SMC products or technology from one country to another are governed by the relevant security laws and regulations of the countries involved in the transaction. Prior to the shipment of a SMC product to another country, assure that all local rules governing that export are known and followed.

⚠ Caution

SMC products are not intended for use as instruments for legal metrology.

Measurement instruments that SMC manufactures or sells have not been qualified by type approval tests relevant to the metrology (measurement) laws of each country. Therefore, SMC products cannot be used for business or certification ordained by the metrology (measurement) laws of each country.