Flame Resistant (Equivalent to UL-94 Standard V-0) Speed Controller with One-touch Fittings Elbow Type

Series AS

Minimizes installation time and cost

Tube swivels 360°

Application to inch size tubing
● **Metric size**
ø6, ø8, ø10, ø12

Maximum operating pressure
1 MPa max.

Applicable tubing materials
FR double layer, FR soft nylon

Retainer prevents accidental loss of needle.

Comes standard with seal.

Elbow type

Symbol

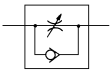

Flow Direction Symbols on Body

	Meter-out type	Meter-in type
Indication symbol		
Symbol	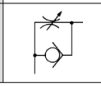	

Model

Elbow type	Port size	Applicable tubing O.D. (mm)			
		6	8	10	12
AS22□1F-01-□W2	R1/8	◉	◉	◉	
AS22□1F-02-□W2	R1/4	◉	◉	◉	
AS32□1F-02-□W2	R1/4	◉	◉	◉	◉
AS32□1F-03-□W2	R3/8	◉	◉	◉	◉
AS42□1F-04-□W2	R1/2			●	●

Note 1) Meter-out and meter-in types can be visually differentiated by the lock nut.
The lock nut on the meter-out type is zinc chromated, while the meter-in type is black zinc chromate plated.
Note 2) ◉: Brass parts are electroless nickel plated, provided as standard. (N specifications)

Specifications

Fluid	Air
Proof pressure	1.5 MPa
Max. operating pressure	1 MPa
Mini. operating pressure	0.1 MPa
Ambient and fluid temperature	–5 to 60°C (No freezing)
Applicable tubing material Note)	FR double layer, FR soft nylon

Note) Use caution regarding the max. tubing operating pressure.
(Refer to pages 423 and 424 for details.)

Flow Rate and Sonic Conductance

Model		AS22□1F-01	AS22□1F-02			AS32□1F			AS42□1F	
Tubing O.D. (mm)		ø6, ø8, ø10	ø4	ø6	ø8, ø10	ø6	ø8	ø10, ø12	ø10	ø12
Controlled flow Free flow	Flow rate L/min (ANR)	230	260	390	460	660	790	920	1580	1710
	Sonic conductance dm³/(s·bar)	0.64	0.72	1.1	1.3	1.8	2.2	2.6	4.4	4.8
Critical pressure ratio	Controlled flow	0.25	0.3			0.25			0.25	
	Free flow	0.2	0.3			0.2			0.3	

Note) Flow rate values are measured at 0.5 MPa and 20°C.

⚠Caution

Be sure to read before handling.
Refer to front matter 56 for Safety Instructions and pages 468 to 471 for Flow Control Equipment Precautions.

How to Order

AS 2 2 0 1F − 01 − 06 W2

Body size

2	1/8, 1/4 standard
3	3/8 standard
4	1/2 standard

Elbow

Control type

0	Meter-out
1	Meter-in

With One-touch fitting

Port size

01	R 1/8
02	R 1/4
03	R 3/8
04	R 1/2

Applicable tubing O.D. Note)

Metric size

06	ø6
08	ø8
10	ø10
12	ø12

Note) For applicable tubing O.D. selection, refer to the Model on page 491.

Needle Valve/Flow Characteristics

Note) The flow characteristics are representative values.

AS2201F-01, AS2211F-01

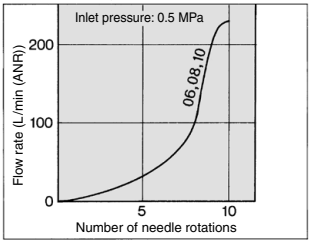

AS2201F-02, AS2211F-02

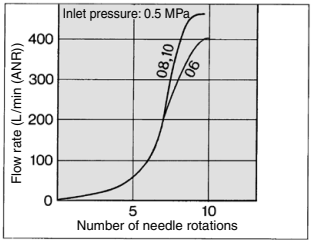

AS3201F, AS3211F

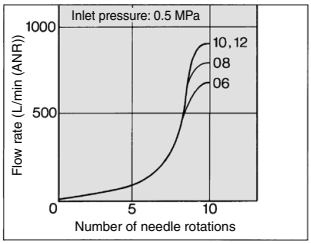

AS4201F, AS4211F

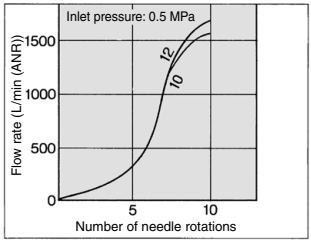

Construction

Meter-out type

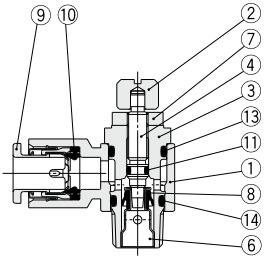

Meter-in type

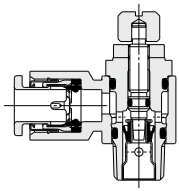

AS32□1F-02

Meter-out type AS3201F-02

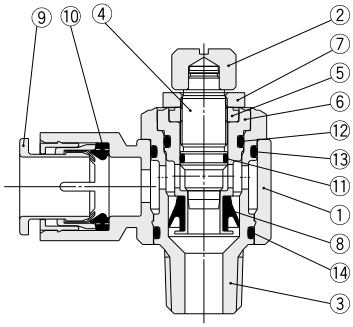

Meter-in type AS3211F-02

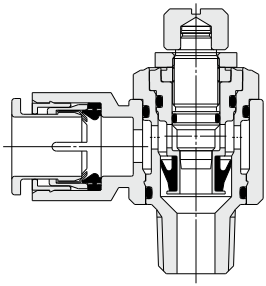

Component Parts

No.	Description	Material	Note	
1	**Body A**	Flame-resistant PBT		
2	**Handle**	Brass	Electroless nickel plated	
3	**Body B**	Brass	Electroless nickel plated	
4	**Needle**	Brass	Electroless nickel plated	
5	**Needle guide**	Brass	Electroless nickel plated	
6	**Seat ring**	Brass	(1)	
7	**Lock nut**	Steel	Meter-out	Zinc chromate plated
			Meter-in	Black zinc chromate plated
8	**U-packing**	HNBR		
9	**Cassette**	—		
10	**Seal**	NBR		
11	**O-ring**	NBR		
12	**O-ring**	NBR		
13	**O-ring**	NBR		
14	**O-ring**	NBR		

Note 1) AS22□1F, AS32□1F: Electroless nickel plated.

Elbow Type

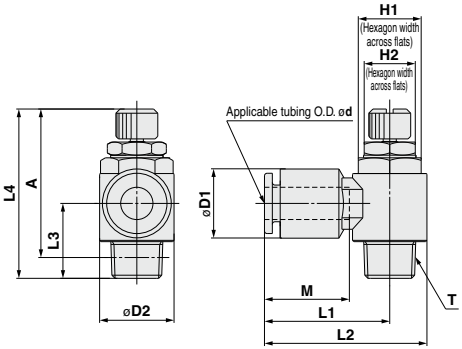

Metric Size

Model	Applicable tubing O.D. ød	T	H1	H2	D1	D2	L1	L2	L3	L4 (1)		A (2)		M	Weight (g)
										Max.	Min.	Max.	Min.		
AS22□1F-01-06W2	6	R 1/8	12	10	13.2	14.2	23.9	31	13.4	36.4	31.4	33.3	28.3	17	19
AS22□1F-01-08W2	8				15.2		25.3	32.4						18.5	21
AS22□1F-01-10W2	10				18.5		32.1	39.2	15.2					21	23
AS22□1F-02-06W2	6		17	12	13.2	18.5	25.2	34.4	17.7	41.1	36.1	35.6	30.6	17	34
AS22□1F-02-08W2	8				15.2		27.2	36.4						18.5	36
AS22□1F-02-10W2	10				18.5		35.3	44.5	18.3					21	38
AS32□1F-02-06W2	6	R 1/4	19	14	13.2	23	27.8	39.3	21.3	49.9	44.9	44.4	39.4	17	63
AS32□1F-02-08W2	8				15.2		29.5	41						18.5	65
AS32□1F-02-10W2	10				18.5		31.5	43.1						21	67
AS32□1F-02-12W2	12				20.9		32.8	44.3						22	69
AS32□1F-03-06W2	6	R 3/8			13.2		27.8	39.3	19.8	47.4	42.4	42.4	37.4	17	58
AS32□1F-03-08W2	8				15.2		29.5	41						18.5	60
AS32□1F-03-10W2	10				18.5		31.5	43.1						21	62
AS32□1F-03-12W2	12				20.9		32.8	44.3						22	64
AS42□1F-04-10W2	10	R 1/2	24	17	18.5	28.6	33.6	47.9	24.5	58.7	51.2	51.4	43.9	21	101
AS42□1F-04-12W2	12				20.9		35.2	49.5						22	107

Note 1) Reference dimensions
Note 2) Reference thread dimensions after installation.