Auto Feed Lube, Auto Feed Tank
ALF400 to 900, ALT-5/-9

Standard Specifications

Model	Auto feed lube						Auto feed tank			
	ALF400	ALF400-06	ALF500	ALF600	ALF800	ALF900	ALT-5	ALT-5-IS-1/2	ALT-9	ALT-9-IS-1/2
Port size	1/4 3/8 1/2	3/4	3/4 1	1	1 1/4 1 1/2	2	AIR: 1/4 OIL: 3/8			
Fluid	Air									
Proof pressure	1.5 MPa									
Max. operating pressure	0.7 MPa						1.0 MPa			
Operating pressure differential range (Note 1) (Difference between tank pressure and line pressure)	0.1 to 0.6 MPa						—			
Vibration resistance (Pressure differential 0.3 MPa)	1 G (9.81 m/sec²) or less						—			
Min. operating flow (Note 2) (L/min (ANR))	1/4: 65 3/8: 100 1/2: 120	120	190	220	1 1/4: 460 1 1/2: 650	1800	—			
Bowl capacity (cm³) (Note 3) (Capacity between levels)	—						5000 (4400)	5000 (3400)	9000 (7800)	9000 (6000)
Recommended lubricant	Turbine oil Class 1 (With no additives), ISO VG32									
Ambient and fluid temperature	–5 to 60°C (No freezing)									
Bowl material	Polycarbonate						Metal (Steel tubing for machine construction)			
Weight (kg)	0.85	0.88	1	1.15	1.85	1.9	12.6	13.2	26.0	26.6
Accessory (Standard) Bowl guard	●	●	●	●	●	●	—			

Note 1) Tank pressure is the pressure of Auto Feed Tank and line pressure is the pressure of Auto Feed Lube.
Note 2) Conditions: Inlet pressure 0.5 MPa, 5 drops/min, Turbine oil class 1 (with no additives) ISO VG32, Temperature 20°C, Needle fully open. Use air consumption rate for minimum operating flow.
Note 3) Capacity between levels: in the case of float switch equipped model, the capacity is measured in levels between the level gauge upper limit and the lower limit of the float switch detective range.

The problem of running out of oil is prevented because the oil is fed automatically.
This system makes lubrication work unnecessary, thus significantly reducing the amount of maintenance labor.

Accessory (Option) Part No.

Description \ Model	Part no.					
	ALF400	ALF400-06	ALF500	ALF600	ALF800	ALF900
Bracket	B44P	B44-1P	3/4: B45-1P 1: B45-2P	B46P	—	—

Note) A float switch can not be mounted on “ALT-5” or “ALT-9” afterwards.

ALF400

ALT-5

Symbol

Auto feed lube

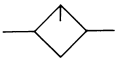

Auto feed tank

Piping example

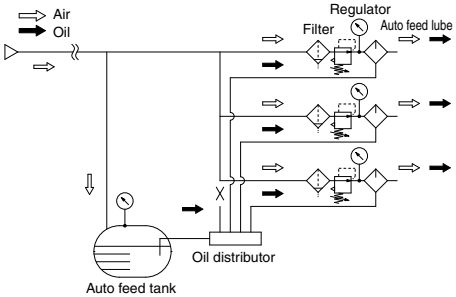

Series ALF400 to 900, ALT-5/-9

How to Order

<Auto Feed Lube>

ALF [40] 0 – [ ] [02] [ ] – [ ]

Auto Feed Lube

Body size

40	1/2
50	3/4
60	1
80	1 1/2
90	2

Thread type

Nil	Rc
N	NPT
F	G

Port size

02	1/4
03	3/8
04	1/2
06	3/4
10	1
12	1 1/4
14	1 1/2
20	2

Option

Symbol	Description	Applicable model
Nil	—	—
B	With bracket	ALF400 to 600
X208	Metal case with a level gauge	ALF400 to 900

Option

Nil	—
R	Flow direction: Right to left

<Auto Feed Tank>

[ ] **ALT** – [5] – [IS-1] – [ ]

Auto Feed Tank

Thread Type

Nil	Rc
N	NPT
E	G

Tank capacity

5	5000 cm³ tank
9	9000 cm³ tank

Option

IS-1	W/float switch (Bottom limit ON)
IS-2	W/float switch (Bottom limit OFF)

Option

Nil	—
R	Flow direction: Left to right

Working Principle/Auto Feed Lube

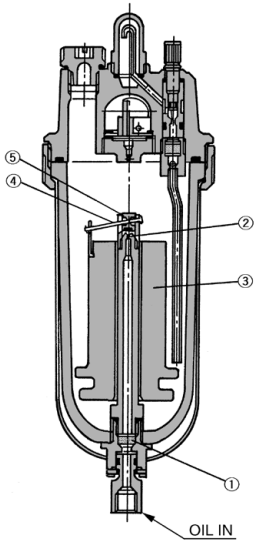

The oil that has been pumped from the tank passes through felt ① where it is filtered, and is fed into the case through nozzle ②. When the volume of oil reaches a certain level, float ③ ascends, valve ⑤ descends via lever ④, nozzle ② closes, and the feeding of oil stops, thus completing the oil feeding process. When the oil inside the case is consumed, float ③ descends, valve ⑤ ascends via lever ④, allowing oil to be fed from nozzle ②.

Operating Pressure Range

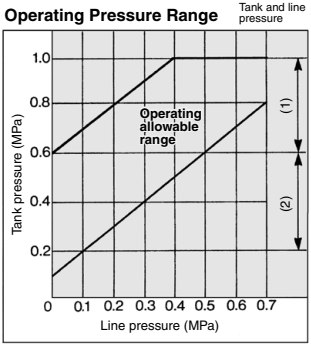

Note 1) Tank pressure is removed when line pressure is stopped.
Note 2) Tank pressure is kept same when line pressure is stopped possible to use.

⚠ Precautions

Be sure to read before handling. Refer to front matter 43 for Safety Instructions and pages 365 to 369 for Precautions on every series.

Mounting

⚠ Warning

If the pressure is discharged, the oil could flow back if the operating pressure differential range (the differential between the tank and line pressures) exceeds 0.6 MPa. Therefore, make sure to also discharge the tank pressure.

⚠ Caution

Install the float vertically inside the bowl so that it will not come into contact with the siphon tube, preventing the oil from dripping poorly.

Maintenance

⚠ Caution

Oil cannot be fed into Auto Feed Lube under being pressurized. We recommend oil is supplied from cam handle (plug for oil supply) of an auto feed tank.

Construction: Auto Feed Lube

Symbol

ALF400

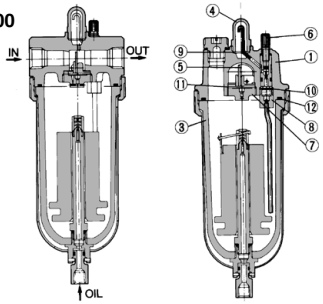

ALF500/600

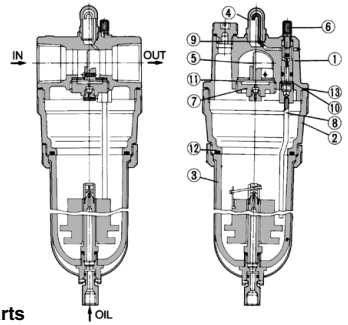

ALF800/900

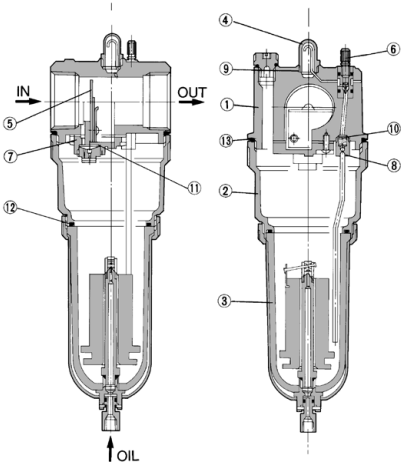

Component Parts

No.	Description	Material			Note
		ALF400, 400-06	ALF500, 600	ALF800, 900	
1	Body	Aluminum die-casted		Aluminum casted	Platinum silver painted
2	Housing	—	Aluminum die-casted		Platinum silver painted

Replacement Parts

No.	Description		Material	Part no.						Qty.
				ALF400	ALF400-06	ALF500	ALF600	ALF800	ALF900	
3	Auto feed	Standard	—	ALF-3	ALF-3	ALF-3	ALF-3	ALF-3	ALF-3	1
		X208		ALF-3-X208	ALF-3-X208	ALF-3-X208	ALF-3-X208	ALF-3-X208	ALF-3-X208	
4	Sight dome		Polycarbonate	12316	12316	12316	12316	12316	12316	1
5	Bumper assembly		—	123122-3A (04) 123122-2A (03) 123122-1A (02)	123122-3A	123210A	123310A	123417A (12) 123416A (14)	12356A	1
6	Needle stud assembly		—	123128PA	123128PA	123128PA	123128PA	123128PA	123128PA	1
7	Retainer assembly		—	123182 Note1)	123182 Note1)	12325A	12335A	123032 Note1)	—	1
8	Siphon tube assembly		—	124230A	124230A	124231A	124232A	124232A	124232A	1
9	Sight dome seal		Urethane rubber	12318	12318	12318	12318	12318	12318	1
10	Siphon nut seal		Urethane rubber	123111	123111	123111	123111	123111	123111	1
11	Bumper retainer seal		NBR	123126	123126	123213	123313	123011	—	2 (1) Note2)
12	Bowl O-ring		NBR	113136	113136	113136	113136	113136	113136	1
13	Housing O-ring		NBR	—	—	KA00465	KA00466	KA00466	KA00466	1

Note 1) Description: Bumper retainer, Material: POM
Note 2) ( ): Qty. for ALF800 only

Construction: Auto Feed Tank

Symbol

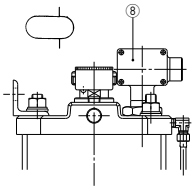

ALT-5/-9

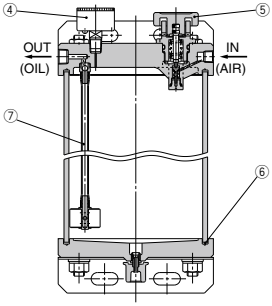

Working principle/Auto Feed Tank

By turning cam handle Ⓐ 90° clockwise, valve Ⓑ opens, allowing the air that has entered from the IN side to be introduced into the tank. Due to the air pressure, the oil in the tank passes through felt Ⓒ and exits from the OUT side. Turning cam handle Ⓐ 90° counterclockwise stops the air from the IN side, thus stopping the feeding of the oil.

Component Parts

No.	Description	Material	Part no.				Qty.
			(N, E) ALT-5	(N, E) ALT-5-IS-1, 2	(N, E) ALT-9	(N, E) ALT-9-IS-1, 2	
4	Pressure gauge	—	G46-10-02(Nil, E) G46-P10-N02(N)				1
5	Cam handle assembly	—	12374AP				1
6	Seal	NBR	12377		12384		2
7	Siphon tube assembly	—	123712A				1
8	Float switch	—	—	IS410-1, 2	—	IS410-1, 2	1

Dimensions: Auto Feed Lube

ALF400

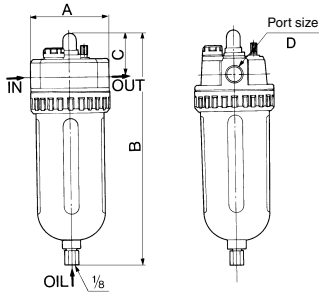

ALF500/600

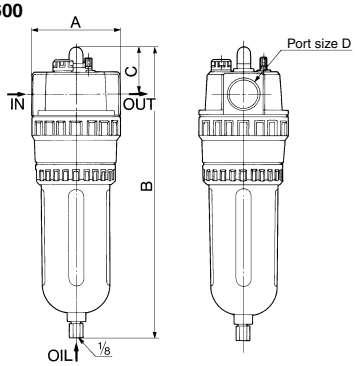

ALF800/900

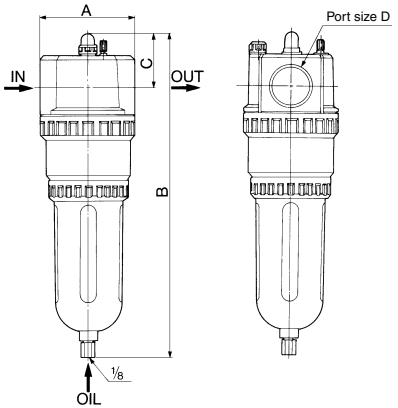

Model	Port size D	A	B	C
ALF400	1/4, 3/8, 1/2	80	239	44
ALF400-06	3/4	85	247	46
ALF500	3/4, 1	90	296	48
ALF600	1	100	320	51
ALF800	1 1/4, 1 1/2	100	339	59
ALF900	2	100	345	63

Dimensions: Auto Feed Tank

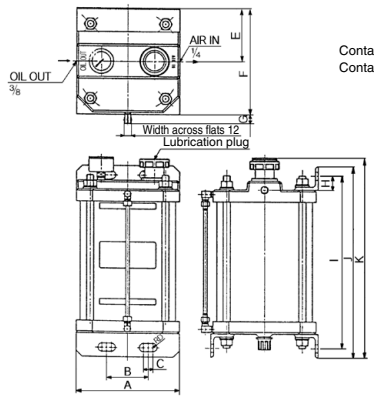

Float switch

Contact point capacity: AC: 15 VA, DC: 15 W
Contact point construction: 1a, 1b

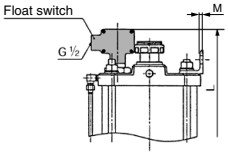

Model	A	B	C	D	E	F	G	H	I	J	K	L	M
ALT-5	174	70	16	7	91	182	15	24	382	414	428	—	5
ALT-5-IS	174	70	16	7	91	182	15	24	382	414	428	449	5
ALT-9	234	108	30	7	121	242	16	40	422	472	—	—	5
ALT-9-IS	234	108	30	7	121	242	16	40	422	472	—	482	5

ALF400 to 900, ALT-5/-9
Related Products:

Oil Distributor Series VA, VB

VB6-6

VA4-6

How to Order

V A 4 – 6

- Oil distributor
- Distribution

A	Both sides exhaust
B	One side exhaust

- Number of distribution ports

(VA)		(VB)	
4	4 port	4	4 port
6	6 port	6	6 port
10	10 port	8	8 port
16	16 port		

- Applicable tubing O.D.

6	ø6

Dimensions

VA□-6

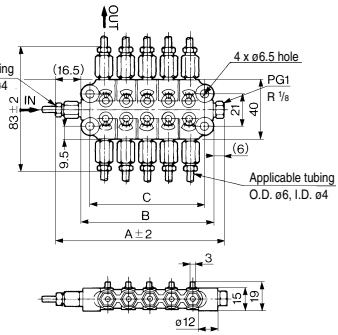

Model	Number of distribution ports	A	B	C	Applicable tubing
VA4-6	4	—	36.5	—	ø6
VA6-6	6	82.5	60	48	
VA10-6	10	110.5	88	76	
VA16-6	16	152.5	130	118	

Note) Insert seal plug (PG1) into the distribution port which is not used.

VB□-6

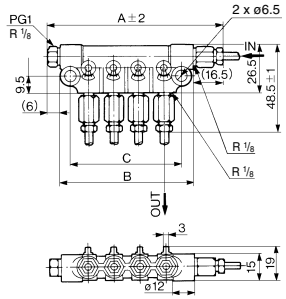

Model	Number of distribution ports	A	B	C	Applicable tubing
VB4-6	4	96.5	74	62	ø6
VB6-6	6	124.5	102	90	
VB8-6	8	152.5	130	118	

Nylon Tubing

T0604

Specifications

Model	T0604
Max. operating pressure	1.5 MPa
Burst pressure	Refer to the burst pressure characteristics curve.
Min. bending radius (mm) Note)	24
Operating temperature	–20°C to 60°C
Material	Nylon 12

Note) The value at temp. of 20°C and with O.D. variable rate 10% max.

How to Order

T 0604 B – 20

- Nylon tubing
- Tube size O.D. ø6 I.D. ø4
- Color

Symbol	Color
B	Black
W	White
R	Red
BU	Blue
Y	Yellow
G	Green

- Length per roll

20	20 m
100	100 m roll (Black, white only)

Burst Pressure Characteristics Curve and Operating Pressure

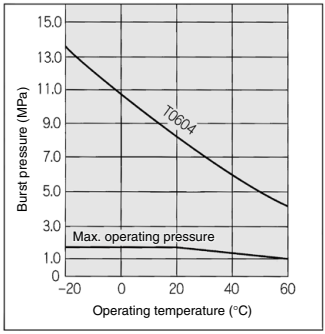

* Maximum operating pressure is 1/3 max. of burst pressure at 60°C, considering the safety ratio.