Mini Rotary Actuator/Rack & Pinion Style

Series CRJ

Size: 05, 1

Mini Rotary Actuator *Series CRJ*

Rack & Pinion Style/Size: 05, 1

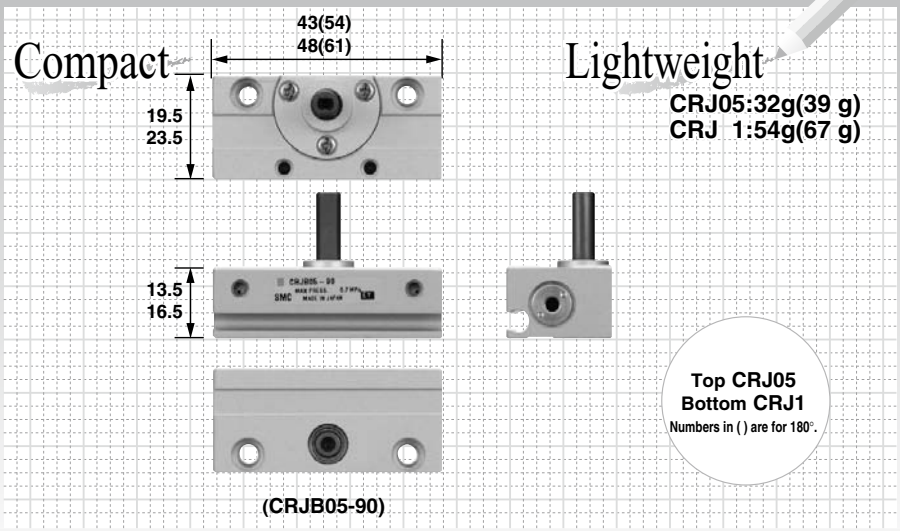

Flexible mounting

A new compact body design not only reduces overall space requirements, but also achieves space-savings in wiring and piping. Ease in mounting is maximized thanks to the merits of the new compact body.

■ Free mounting

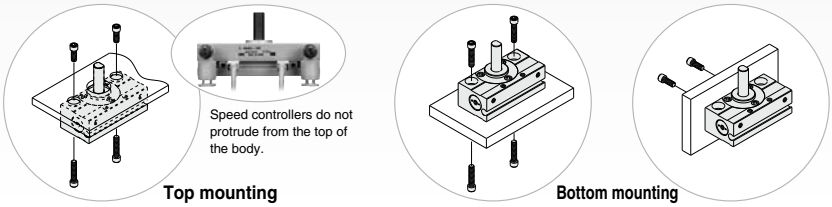

■ Wiring and piping direction can be selected depending on mounting conditions.

Mounting examples for auto switch and speed controller

Allowable load improved

Large roller bearing and large diameter output shaft add to overall compactness while ensuring high rigidity.

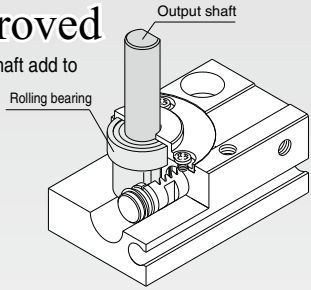

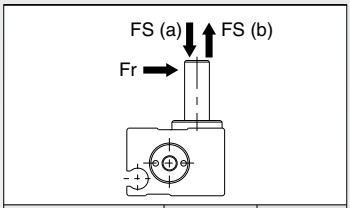

Model		CRJ05	CRJ1
Allowable load (N)	Fr	25	30
	FS (a)	20	25
	FS (b)	20	25
Output shaft size (mm)		ø5	ø6

Backlash reduced

Even with a single rack design, the use of a special construction minimizes backlash.

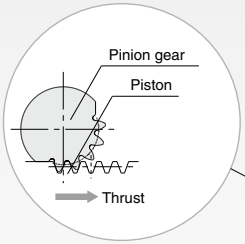

Stopping the pinion gear by having it strike against the flat surface of the piston eliminates backlash.

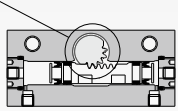

■ With external stopper/*Series CRJU*

4 to 5 times allowable kinetic energy (Basic type compared to CRJB)

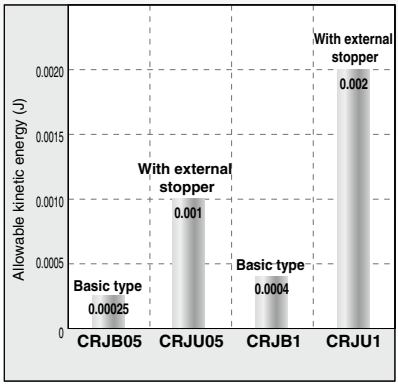

Angle is adjustable: ±5° at each rotation end

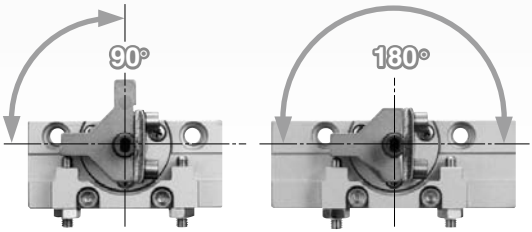

Series Variations

Series		Rotating angle 90°	100°	180°	190°	Connection port location	Auto switch
Basic type	CRJB05	●	●	●	●	Front ported Side ported	D-F8 type D-M9/M9□V type D-M9□W/M9□WV type
	CRJB 1	●	●	●	●		
With external stopper	CRJU05	●	—	●	—		
	CRJU 1	●	—	●	—		

Mini Rotary Actuator
Rack & Pinion Style
Series CRJ

How to Order

Rotating angle

90	90°
100	100°
180	180°
190	190°

Basic type CRJ B [ ] 05 – 90 [ ] – M9BW [ ] – [ ]

With external stopper CRJ U [ ] 05 – 90 [ ] – M9BW [ ] – [ ]

Pattern

Nil	Standard
P	Simple Specials/Made to Order

*Refer to pages 188 and 189 for details.

Size

05
1

Rotating angle

90	90°
180	180°

Connection port location

Nil	Front ported 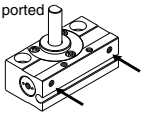
E	Side ported 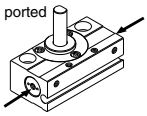

Made to Order
Refer to page 183 for details.

Number of auto switches

S	1 pc.
Nil	2 pcs.

Note) Maximum number of auto switches mountable is two.

Auto switch

Nil	Without auto switch (Built-in magnet)

∗ For the applicable auto switch model, refer to the table below.

Applicable Auto Switches/Refer to pages 807 to 856 for further information on auto switches.

Type	Special function	Electrical entry	Indicator light	Wiring (Output)	Load voltage DC		Load voltage AC	Auto switch model: Perpendicular entry	Auto switch model: In-line entry	Lead wire length (m)∗: 0.5 (Nil)	1 (M)	3 (L)	5 (Z)	Pre-wired connector	Applicable load	
Solid state auto switch	—	Grommet	Yes	3-wire (NPN)	24 V	5 V,12 V	—	**M9NV**	**M9N**	●	●	●	○	○	IC circuit	Relay, PLC
								F8N	—	●	—	●	○	—		
				3-wire (PNP)				**M9PV**	**M9P**	●	●	●	○	○		
								F8P	—	●	—	●	○	—		
				2-wire		12 V		**M9BV**	**M9B**	●	●	●	○	○	—	
								F8B	—	●	—	●	○	—		
	Diagnosis indication (2-color)			3-wire (NPN)		5 V,12 V		**M9NWV**	**M9NW**	●	●	●	○	○	IC circuit	
				3-wire (PNP)				**M9PWV**	**M9PW**	●	●	●	○	○		
				2-wire		12 V		**M9BWV**	**M9BW**	●	●	●	○	○	—	
	Water-resistant (2-color indicator)			3-wire (NPN)		5 V,12 V		**M9NAV**∗∗	**M9NA**∗∗	○	○	●	○	○	IC circuit	
				3-wire (PNP)				**M9PAV**∗∗	**M9PA**∗∗	○	○	●	○	○		
				2-wire		12 V		**M9BAV**∗∗	**M9BA**∗∗	○	○	●	○	○	—	

∗∗ Although it is possible to mount water-resistant type auto switches, note that the rotary actuator itself is not of water-resistant construction.
∗ Lead wire length symbols: 0.5 m ····· Nil (Example) M9NW
1 m ····· M (Example) M9NWM
3 m ····· L (Example) M9NWL
5 m ····· Z (Example) F9NWZ

∗ Auto switches marked "○" are produced upon receipt of order.

Made to Order — Refer to pages 843 and 844 for detailed solid state auto switches with pre-wired connectors.

Note 1) When using a D-F8□ switch, mount it at a distance of 10 mm or more from magnetic substances such as iron, etc.
∗ Auto switches are shipped together, but not assembled.

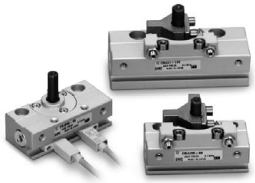

Specifications

Size	05		1	
	Basic type	With external stopper	Basic type	With external stopper
Fluid	Air (Non-lube)			
Max. operating pressure	0.7 MPa			
Min. operating pressure	0.15 MPa			
Ambient and fluid temperature	0 to 60°C (No freezing)			
Rotating angle Note)	$90^{\circ}{}^{+8^{\circ}}_{0}$, $100^{+10^{\circ}}_{0}$ $180^{\circ}{}^{+8^{\circ}}_{0}$, $190^{+10^{\circ}}_{0}$	90°, 180°	$90^{\circ}{}^{+8^{\circ}}_{0}$, $100^{+10^{\circ}}_{0}$ $180^{\circ}{}^{+8^{\circ}}_{0}$, $190^{+10^{\circ}}_{0}$	90°, 180°
Angle adjustment range	—	±5° at each rotation end	—	±5° at each rotation end
Cylinder bore size	ø6		ø8	
Port size	M3 x 0.5			

Note) If optimum accuracy of the (rotating) angle is required, select an actuator with external stopper.

Allowable Kinetic Energy and Rotation Time Adjustment Range

Size			Allowable kinetic energy (J)	Rotation time adjustment range for stable operation (s/90°)
05	Basic type	**CRJB05**	0.00025	0.1 to 0.5
	With external stopper	**CRJU05**	0.001	
1	Basic type	**CRJB1**	0.0004	
	With external stopper	**CRJU1**	0.002	

Weight

Type		Model	Weight (g) Note)
Basic type	05	**CRJB05-90**	32
		CRJB05-100	
		CRJB05-180	39
		CRJB05-190	
	1	**CRJB1-90**	54
		CRJB1-100	
		CRJB1-180	67
		CRJB1-190	
With external stopper	05	**CRJU05-90**	47
		CRJU05-180	53
	1	**CRJU1-90**	70
		CRJU1-180	81

Note) Values above do not include auto switch weight.

Made to Order

Made to Order
(Refer to pages 188 and 189 for details.)

Symbol	Specifications/Description
-XA1 to XA17	Shaft Pattern Sequencing I

Symbol

Moisture Control Tube Series IDK

When operating an actuator with a small diameter and a short stroke at a high frequency, the dew condensation (water droplet) may occur inside the piping depending on the conditions.
Simply connecting the moisture control tube to the actuator will prevent dew condensation from occurring. For details, refer to **Series IDK in the WEB catalog**.

Rotating Direction and Rotating Angle

- The shaft turns clockwise when the A port is pressurized, and counterclockwise when the B port is pressurized.
- For actuators with external stopper, the rotation end can be set within the ranges shown in the drawing by adjusting the stopper bolt.

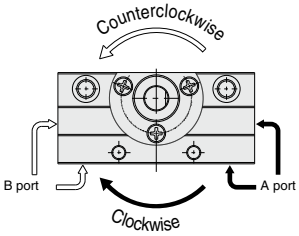

Basic type

For 90° and 100°

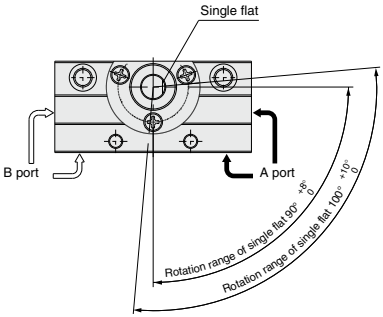

For 180° and 190°

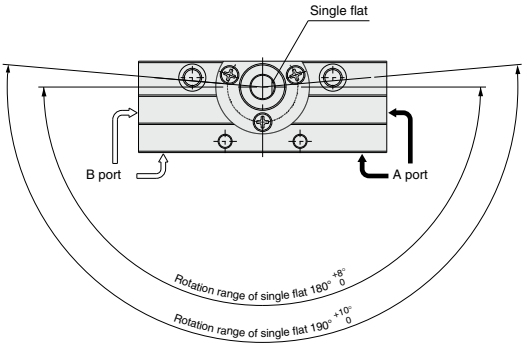

With external stopper

For 90°

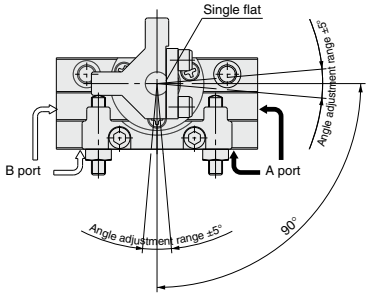

For 180°

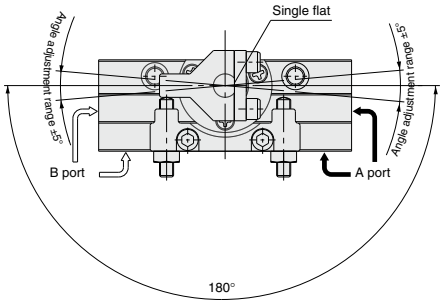

Note) • The drawings show the rotation range for the shaft's single flat.
• The single flat position in the drawings shows the counterclockwise rotation end when the rotation angle is adjusted to 90° and 180°.

Construction

Basic type: CRJB

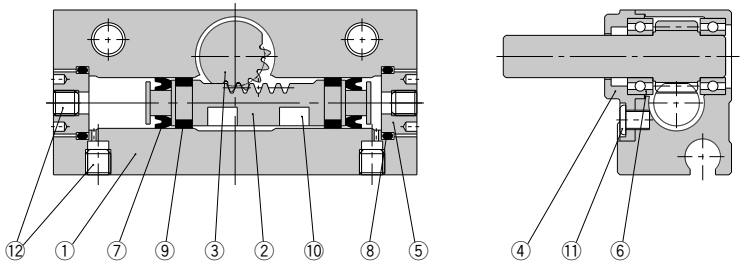

With external stopper: CRJU

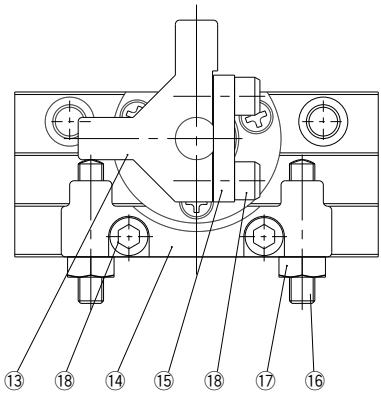

Component Parts

No.	Description	Material	Note
①	**Body**	Aluminum alloy	Anodized
②	**Piston**	Stainless steel	
③	**Shaft**	Stainless steel	
④	**Bearing retainer** *	Aluminum alloy	Anodized
⑤	**Cover**	Aluminum alloy	Anodized
⑥	**Bearing**	Bearing steel	
⑦	**Piston seal**	NBR	
⑧	**O-ring**	NBR	
⑨	**Wear ring**	Resin	

No.	Description	Material	Note
⑩	**Magnet**	—	
⑪	**Round head no. 0 Philips screw**	Steel wire	
⑫	**Hexagon socket head set screw**	Stainless steel	
⑬	**Stopper**	Chrome molybdenum steel	Electroless nickel plated
⑭	**Holder**	Aluminum alloy	Anodized
⑮	**Stopper retainer**	Carbon steel	Zinc chromated
⑯	**Hexagon socket head set screw**	Steel wire	
⑰	**Hexagon nut**	Steel wire	
⑱	**Hexagon socket head cap screw**	Stainless steel	

* The mounting position of hexagon socket head set screws (No. 12) varies depending on the connecting port location.
* Individual part cannot be shipped.

Dimensions/Size 05, 1

Basic type: CRJB

Note 1) This dimension is for the actuator with D-M9 type auto switch (not including the 2-color indication type).

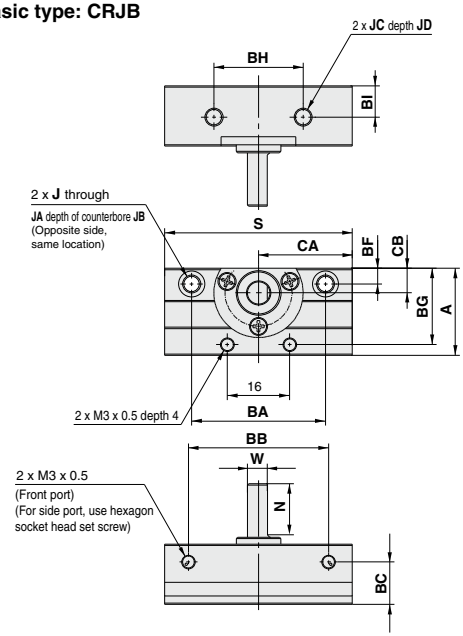

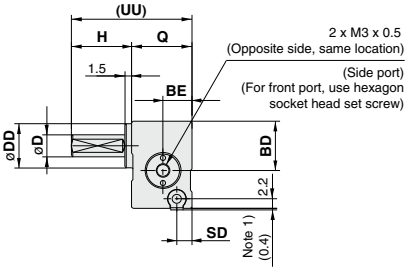

With external stopper: CRJU

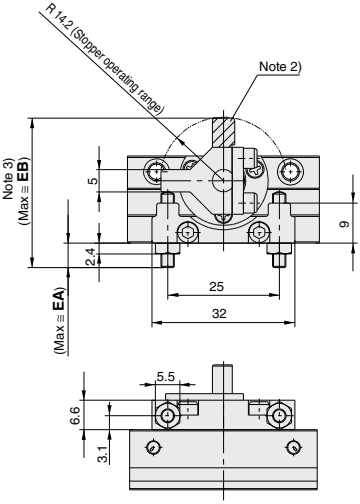

Note 2) For the 180° specification, the slated line area do not exist.
Note 3) The maximum dimensions that appear are those measured at the maximum rotating angle. settings: 100° and 190°.

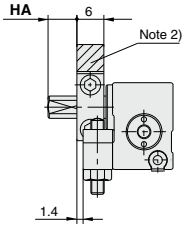

(mm)

Size	EA	EB	HA
CRJU05	5.6	33.8	6.5
CRJU1	5.6	35.8	7.5

(mm)

Size	Rotating angle	A	BA	BB	BC	BD	BE	BF	BG	BH	BI	CA	CB	D	DD	J	JA	JB	JC	JD	H	N	Q	S	SD	UU	W
CRJB05	90°	19.5	30	32.4	9.5	11	6.5	3.5	17.1	20	7	21.5	5.5	5g6	10h9	M4 x 0.7	5.8	3.5	M4 x 0.7	5	14.5	12.5	13.5	43	3.4	28	4.5
	180°			43.4								27												54			
CRJB 1	90°	23.5	35	37.4	12.5	14	9	4.5	21.1	22	8.5	24	7.5	6g6	14h9	M5 x 0.8	7.5	4.5	M5 x 0.8	6	15.5	13.5	16.5	48	5.9	32	5.5
	180°			50.4								30.5												61			

Proper Auto Switch Mounting Position (Detection at rotation end)

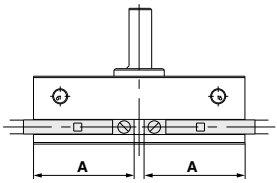

For D-M9

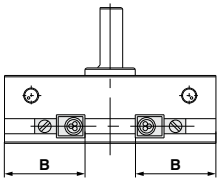

For D-F8

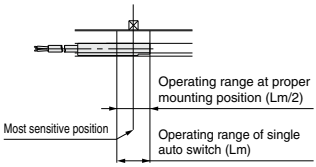

Size	Rotating angle	D-M9 auto switch			D-F8 auto switch		
		A	Operating angle θ m	Hysteresis angle	B	Operating angle θ m	Hysteresis angle
05	90°	20.5	46°	10°	16.5	20°	10°
	180°	23.2			19.2		
1	90°	22.4	41°	10°	18.4	15°	10°
	180°	25.6			21.6		

Operating angle θ m: Value of the operating range Lm of a single auto switch converted to an axial rotating angle.
Hysteresis angle : Value of auto switch hysteresis converted to an angle.
Note) The values given in the table above are representative values, not meant to be guaranteed.
In the actual setting, adjust the value after confirming the auto switch performance.

Simple Specials: -XA1 to -XA17: Shaft Pattern Sequencing I

Shaft pattern sequencing is dealt with a simple made-to-order system. (Refer to front matter 32.) Please contact SMC for a specification sheet when placing an order.

Shaft Pattern Sequencing I

Symbol
-XA1 to -XA17

How to Order

CRJ B P 05 – 90 E – M9BW – X A1 A2

Type

B	Basic
U	With external stopper

Size

05
1

Pattern

Rotating angle

90	90°
100	100°
180	180°
190	190°

∗ CRJU: 90 and 180

Connecting port

Nil	Front port
E	Side port

Auto switch
Refer to page 182 for the part no. of auto switches.

Symbol for simple special, Made-to-Order products
∗ Combination of simple specials and Made-to-Order, it is possible for up to 2 types shown in chart 1.

Refer to page 182 for "How to Order."

∗ Combination of simple specials and Made-to-Order, it is possible for up to 2 types shown in chart 1.

Combination Chart of Simple Specials for Tip End Shape

Chart 1. Combination between -XA□ and -XA□

Symbol	Description	Top port		Applicable size	Combination					
		Upper	Lower							
XA 1	Female thread at the end	●	—	05, 1	XA1					
XA 2	Female thread at the end	—	●		●	XA2				
XA13	Shaft through-hole	●	●		—	—	XA13			
XA14	Shaft through-hole and female thread at the end	●	—		—	—	—	XA14		
XA15	Shaft through-hole and female thread at the end	—	●		—	—	—	—	XA15	
XA16	Shaft through-hole and double shaft-end female thread	●	●		—	—	—	—	—	XA16
XA17	Shortened shaft	●	—		—	●	●	—	●	—

Symbol

Shaft Pattern Sequencing I

-XA1 to -XA17

Additional Reminders

1. Enter the dimensions within a range that allows for additional machining.
2. SMC will make appropriate arrangements if no dimensional, tolerance, or finish instructions are given in the diagram.
3. The length of the unthreaded portion is 2 to 3 pitches.
4. Unless specified otherwise, the thread pitch is based on coarse metric threads. M3 x 0.5, M4 x 0.7
5. Enter the desired figures in the ☐☐☐ portion of the diagram.
6. Chamfer face of the parts machining additionally is C0.5.
7. The additionally machined port will have an aluminum surface since it is left unfinished.

A1

The long shaft can be further shortened by machining female threads into it.
(If shortening the shaft is not required, indicate "*" for dimension X.)
• The maximum dimension L1 is, as a rule, twice the thread size
(Example) For M3: L1 = 6

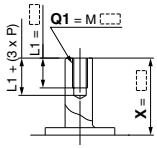

(mm)

Size	X	Q1
CRJB05	1.5 to 14.5	M3
CRJU05	8 to 14.5	M3
CRJB 1	1.5 to 15.5	M3,M4
CRJU 1	8 to 15.5	M3,M4

A2

Machine female threads into the short shaft
• The maximum dimension L2 is, as a rule, twice the thread size.
(Example) For M4: L2 = 8

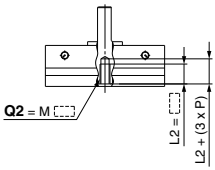

(mm)

Size	Q2
05	M3
1	M3, M4

A13

Shaft with through-hole
Minimum machining diameter for ød1 is 0.1.

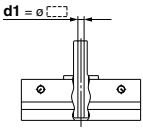

(mm)

Size	d1
05	ø2 to ø2.5
1	ø2 to ø3.5

A14

A special end is machined onto the long shaft, and a through-hole is drilled into it.
Female threads are machined into the through-hole, whose diameter is equivalent to the pilot hole diameter.
• The maximum dimension L1 is, as a rule, twice the thread size.
(Example) For M3: L1 = 6

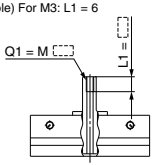

(mm)

Thread \ Size	05	1
M3 x 0.5	ø2.5	ø2.5
M4 x 0.7	—	ø3.3

A15

A special end is machined onto the short shaft, and a through-hole is drilled into it.
Female threads are machined into the through-hole, whose diameter is equivalent to the pilot hole diameter.
• The maximum dimension L2 is, as a rule, twice the thread size.
(Example) For M4: L2 = 8

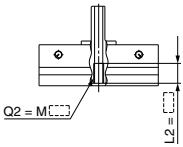

(mm)

Thread \ Size	05	1
M3 x 0.5	ø2.5	ø2.5
M4 x 0.7	—	ø3.3

A16

A special end is machined onto both the long and short shafts, and a through-hole is drilled into both shafts.
Female threads are machined into the through-holes, whose diameter is equivalent to the diameter of the pilot holes.
• The maximum dimension L1 is, as a rule, twice the thread size.
(Example) For M3: L1 = 6
• Equal dimensions are indicated by the same marker.

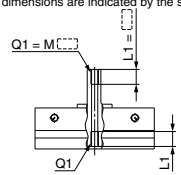

(mm)

Thread \ Size	05	1
M3 x 0.5	ø2.5	ø2.5
M4 x 0.7	—	ø3.3

A17

Shorten the long shaft.

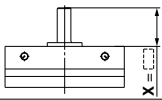

(mm)

Size	X
CRJB05	1.5 to 14.5
CRJU05	8 to 14.5
CRJB 1	1.5 to 15.5
CRJU 1	8 to 15.5

Specific Product Precautions

Be sure to read before handling.
Refer to front matter 35 for Safety Instructions and pages 4 to 14 for Rotary Actuator and Auto Switch Precautions.

Rotation Adjustment

⚠ Caution

As a standard feature, the actuator with external stopper is equipped with a rotation angle adjustment screw that can be used to adjust the angle of rotation.

Size	Angle adjustment per single rotation of angle adjustment screw
05	2.3°
1	2.3°

The rotation adjustment range for the actuator with external stopper is ±5° at each rotation end. Please note that adjusting beyond this range, may cause product malfunction.

Mounting of Speed Controller and Fittings

⚠ Caution

The M3 x 0.5 piping port is used. In case the speed controller or fittings are directly connected, use the series listed below.

- Speed controller
  AS12□1F/Elbow type
  AS13□1F/Universal type
- One-touch fitting
  One-touch mini Series KJ
- Reducer bushing Series M3

Mounting of Auto Switch

⚠ Caution

If a size 05 actuator with auto switch is being used, keep the magnetic body away at least 2 mm or more from the bottom of the actuator.

If the magnetic body comes closer than 2 mm, malfunction of the auto switch may occur due to the magnetic force drop.

∗ When using the bottom face for mounting, a non-magnetic spacer (such as aluminum) is required as shown below.

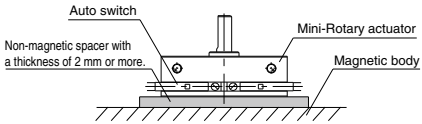

Maintenance

⚠ Caution

This product requires special tools; therefore, it cannot be disassembled for maintenance.

External Stopper Unit

⚠ Caution

Order external stopper unit with the unit part numbers shown below.

Parts List

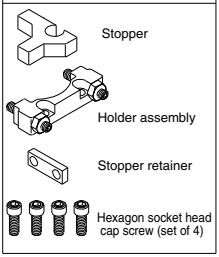

Model	Unit part no.
CRJU05-90	P531010-1
CRJU05-180	P531010-2
CRJU1-90	P531020-1
CRJU1-180	P531020-2

Note 1) External stopper units for 180° cannot be applied to the 90° Mini-rotary Actuators.
Note 2) When using external stoppers for 90°, use Mini-rotary Actuators with a rotation range of 100°, and for 180°, use actuators with a rotation range of 190°.

External Stopper Assembly Procedure

∗ Actuators with external stopper (Model CRJU) come already assembled; therefore, the following procedure is not required.

⚠ Caution

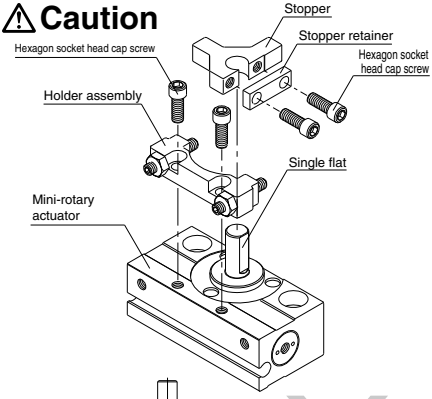

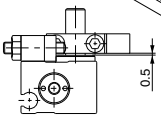

Fig. (1)

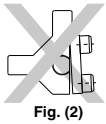

Fig. (2)

1. Assemble the stopper retainer to the stopper temporarily. Then place the stopper retainer in the single flat position and tighten with hexagon socket head cap screws. Leave a space of approximately 0.5 mm between the stopper and the Mini-rotary actuator, as shown in Fig. (1).
   Tighten the hexagon socket head cap screws evenly so that the stopper retainer is not unevenly tightened as in Fig. (2). Furthermore, take precautions to avoid applying excessive force to the shaft when tightening.
2. Tighten the holder assembly with hexagon socket head cap screws.

	Tightening torque (N·m)
Hexagon socket head cap screw	0.8 to 1.2